Biometric Identity Assurance Services (BIAS) SOAP Profile, Version 1.0

CommiteeCommittee Specification Draft 0103

20 October 2009

23 February 2011

Specification URIs:
This Version:
http://docs.oasis-open.org/bias/soap-profile/v1.0/csd03/biasprofile-1v1.0-cd-01.pdfcsd03.doc
(authoritative)
Authoritative)
http://docs.oasis-open.org/bias/soap-profile/v1.0/csd03/biasprofile-1v1.0-cd-01.doccsd03.pdf
http://docs.oasis-open.org/bias/soap-profile/v1.0/csd03/biasprofile-1v1.0-cd-01csd03.html
Previous Version:
http://docs.oasis-open.org/bias/soap-profile/v1.0/csd02/biasprofile-1v1.0-wd-07.pdfcsd02.doc
(Authoritative)
http://docs.oasis-open.org/bias/soap-profile/v1.0/csd02/biasprofile-1v1.0-wd-07.doccsd02.pdf
http://docs.oasis-open.org/bias/soap-profile/v1.0/csd02/biasprofile-1v1.0-wd-07csd02.html
Latest Version:
http://docs.oasis-open.org/bias/soap-profile/v1.0/biasprofile-1.0.pdfdoc
(Authoritative)
http://docs.oasis-open.org/bias/soap-profile/v1.0/biasprofile-1.0.docpdf
http://docs.oasis-open.org/bias/soap-profile/v1.0/biasprofile-1.0.html
Technical Committee:
OASIS Biometric Identity Assurance Services (BIAS) Integration TC
Chair(s):
Cathy Tilton, Daon
Editor(s):
Matthew Swayze and
Cathy Tilton, Daon
Related Work:
This specification is related to:
- ANSI INCITS 442-2008, Biometric Identity Assurance Services (BIAS)

Declared XML Namespace(s):
http://docs.oasis-open.org/bias/ns/bias-1.0/
Abstract:
This document specifies a SOAP profile that implements the BIAS abstract operations specified in INCITS 442 as SOAP messages.

Style Definition: Heading 1, Char: Indent: Left: 0", Hanging: 0.25", Outline numbered + Level: 1 + Numbering Style: 1, 2, 3, … + Start at: 1 + Alignment: Left + Aligned at: 0" + Tab after: 0.3" + Indent at: 0.3", Tab stops: 0.25", List tab + Not at 0.3"
Formatted: English (U.S.)
Formatted: English (U.S.)
Formatted: English (U.S.)
Formatted: English (U.S.)
Formatted: Default Paragraph Font, Underline color: Custom Color(RGB(0,56,168))
Field Code Changed
Formatted: Default Paragraph Font, Underline color: Custom Color(RGB(0,56,168))
Field Code Changed
Formatted: Default Paragraph Font
Formatted: apple-style-span, Underline color: Custom Color(RGB(0,56,168)), Font color: Black
Field Code Changed
Formatted: Hyperlink, Font color: Auto
Formatted: Default Paragraph Font
Field Code Changed
Formatted: Default Paragraph Font
Field Code Changed
Formatted: Default Paragraph Font
Field Code Changed
Formatted: Font color: Auto
Field Code Changed
Field Code Changed
Field Code Changed

Copyright © OASIS Open 2009-2011. All Rights Reserved.

Status:

This document was last revised or approved by the OASIS Biometric Identity Assurance Services (BIAS) Integration TC on the above date. The level of approval is also listed above. Check the "Latest ~~Version" or "Latest Approved~~ Version" location noted above for possible later revisions of this document.

Technical Committee members should send comments on this specification to the Technical Committee's email list. Others should send comments to the Technical Committee by using the ~~"Send A Comment"~~"Send A Comment" button on the Technical Committee's web page at http://www.oasis-open.org/committees/bias/.

For information on whether any patents have been disclosed that may be essential to implementing this specification, and any offers of patent licensing terms, please refer to the Intellectual Property Rights section of the Technical Committee web page (http://www.oasis-open.org/committees/bias/ipr.php).

~~**The non-normative errata page for**~~**Citation Format:**

When referencing this specification ~~is located at~~the following citation format should be used:

[BIAS SOAP PROFILE]*Biometric Identity Assurance Services (BIAS) SOAP Profile Version 1.0.* 23 February 2011. OASIS Committee Specification Draft. http://~~www~~docs.oasis-open.org/~~committees/~~bias/~~/~~soap-profile/v1.0/csd03/biasprofile-v1.0-csd03.doc~~.~~

Formatted: apple-style-span, Font color: Black

Formatted: apple-style-span, Font color: Black

Formatted: apple-style-span, Font color: Black

Field Code Changed

Copyright © OASIS Open 2009-2011. All Rights Reserved.

Notices

Copyright © OASIS® 2009-2011. All Rights Reserved.

All capitalized terms in the following text have the meanings assigned to them in the OASIS Intellectual Property Rights Policy (the "OASIS IPR Policy"). The full Policy may be found at the OASIS website.

This document and translations of it may be copied and furnished to others, and derivative works that comment on or otherwise explain it or assist in its implementation may be prepared, copied, published, and distributed, in whole or in part, without restriction of any kind, provided that the above copyright notice and this section are included on all such copies and derivative works. However, this document itself may not be modified in any way, including by removing the copyright notice or references to OASIS, except as needed for the purpose of developing any document or deliverable produced by an OASIS Technical Committee (in which case the rules applicable to copyrights, as set forth in the OASIS IPR Policy, must be followed) or as required to translate it into languages other than English.

The limited permissions granted above are perpetual and will not be revoked by OASIS or its successors or assigns.

This document and the information contained herein is provided on an "AS IS" basis and OASIS DISCLAIMS ALL WARRANTIES, EXPRESS OR IMPLIED, INCLUDING BUT NOT LIMITED TO ANY WARRANTY THAT THE USE OF THE INFORMATION HEREIN WILL NOT INFRINGE ANY OWNERSHIP RIGHTS OR ANY IMPLIED WARRANTIES OF MERCHANTABILITY OR FITNESS FOR A PARTICULAR PURPOSE.

OASIS requests that any OASIS Party or any other party that believes it has patent claims that would necessarily be infringed by implementations of this OASIS Committee Specification or OASIS Standard, to notify OASIS TC Administrator and provide an indication of its willingness to grant patent licenses to such patent claims in a manner consistent with the IPR Mode of the OASIS Technical Committee that produced this specification.

OASIS invites any party to contact the OASIS TC Administrator if it is aware of a claim of ownership of any patent claims that would necessarily be infringed by implementations of this specification by a patent holder that is not willing to provide a license to such patent claims in a manner consistent with the IPR Mode of the OASIS Technical Committee that produced this specification. OASIS may include such claims on its website, but disclaims any obligation to do so.

OASIS takes no position regarding the validity or scope of any intellectual property or other rights that might be claimed to pertain to the implementation or use of the technology described in this document or the extent to which any license under such rights might or might not be available; neither does it represent that it has made any effort to identify any such rights. Information on OASIS' procedures with respect to rights in any document or deliverable produced by an OASIS Technical Committee can be found on the OASIS website. Copies of claims of rights made available for publication and any assurances of licenses to be made available, or the result of an attempt made to obtain a general license or permission for the use of such proprietary rights by implementers or users of this OASIS Committee Specification or OASIS Standard, can be obtained from the OASIS TC Administrator. OASIS makes no representation that any information or list of intellectual property rights will at any time be complete, or that any claims in such list are, in fact, Essential Claims.

The names "OASIS" and “BIAS” are trademarks of OASIS, the owner and developer of this specification, and should be used only to refer to the organization and its official outputs. OASIS welcomes reference to, and implementation and use of, specifications, while reserving the right to enforce its marks against misleading uses. Please see http://www.oasis-open.org/who/trademark.php for above guidance.

Table of Contents

1 Introduction 9
1.1 Purpose/Scope 9
1.2 Overview 9
1.3 Background 9
1.4 Relationship to Other Standards 10
1.5 Terminology 10
1.6 References 11
1.6.1 Normative References 11
1.6.2 Non-Normative References 12
2 Design Concepts and Architecture (non-normative) 14
2.1 Philosophy 14
2.2 Context 14
2.3 Architecture 15
3 Data dictionary 17
3.1 Documentation Conventions 17
3.2 Common Elements 18
3.2.1 ApplicationIdentifier 18
3.2.2 ApplicationUserIdentifier 18
3.2.3 ~~BIASBiometricDataType~~BaseBIRType 18
3.2.4 ~~BIASFaultCode~~BIASBiometricDataType 18
3.2.5 ~~BIASFaultDetail~~BIASFaultCode 19
3.2.6 ~~BIASIdentity~~BIASFaultDetail 19
3.2.7 ~~BIASIDType~~BIASIdentity 20
3.2.8 ~~BiographicDataItemType~~BIASIDType 20
3.2.9 ~~BiographicDataSetType~~BinaryBIR 21
3.2.10 ~~BiographicDataType~~BiographicDataItemType 21
3.2.11 ~~BiometricDataElementType~~BiographicDataSetType 21
3.2.12 ~~BiometricDataListType~~BiographicDataType 22
3.2.13 ~~CandidateListType~~BiometricDataElementType 23
3.2.14 ~~CandidateType~~BiometricDataListType 23
3.2.15 ~~CapabilityListType~~CandidateListResultType 24
3.2.16 ~~CapabilityName~~CandidateListType 24
3.2.17 ~~CapabilityType~~CandidateType 24
3.2.18 ~~CBEFF_BIR_ListType~~CapabilityListType 24
3.2.19 ~~CBEFF_BIR_Type~~CapabilityName 25
3.2.20 ~~Classification~~CapabilityType 26
3.2.21 ~~ClassificationAlgorithmType~~CBEFF_BIR_ListType 26
3.2.22 ~~ClassificationData~~CBEFF_BIR_Type 26
3.2.23 ~~EncounterListType~~Classification 27
3.2.24 ~~FusionInformationListType~~ClassificationAlgorithmType 27
3.2.25 ~~FusionInformationType~~ClassificationData 28
3.2.26 ~~GenericRequestParameters~~EncounterListType 28

Copyright © OASIS Open 2009-2011. All Rights Reserved.

Formatted ...
Field Code Changed ...
Field Code Changed ...
Formatted ...
Field Code Changed ...
Field Code Changed ...
Formatted ...
Field Code Changed ...
Field Code Changed ...
Formatted ...
Field Code Changed ...
Field Code Changed ...
Formatted ...
Field Code Changed ...
Field Code Changed ...
Formatted ...
Field Code Changed ...
Field Code Changed ...
Formatted ...
Field Code Changed ...
Field Code Changed ...
Formatted ...
Field Code Changed ...
Field Code Changed ...
Formatted ...
Field Code Changed ...
Field Code Changed ...
Formatted ...
Field Code Changed ...
Field Code Changed ...
Formatted ...
Field Code Changed ...
Field Code Changed ...
Formatted ...
Field Code Changed ...
Field Code Changed ...
Formatted ...
Field Code Changed ...
Field Code Changed ...
Formatted ...
Field Code Changed ...
Field Code Changed ...
Formatted ...
Field Code Changed ...
Field Code Changed ...
Formatted ...
Field Code Changed ...
Field Code Changed ...
Formatted ...
Field Code Changed ...
Field Code Changed ...
Formatted ...
Field Code Changed ...
Field Code Changed ...
Formatted ...
Field Code Changed ...
Field Code Changed ...
Formatted ...
Field Code Changed ...
Field Code Changed ...
Formatted ...
Field Code Changed ...
Field Code Changed ...
Formatted ...
Field Code Changed ...
Field Code Changed ...
Formatted ...
Field Code Changed ...
Field Code Changed ...
Formatted ...
Field Code Changed ...
Field Code Changed ...
Formatted ...
Field Code Changed ...
Field Code Changed ...
Formatted ...
Field Code Changed ...
Field Code Changed ...
Formatted ...

3.2.27 ~~InformationType~~FusionDecision 28
3.2.28 ~~ListFilterType~~FusionInformationListType 28
3.2.29 ~~MatchType~~FusionInformationType 28
3.2.30 ~~ProcessingOptionsType~~FusionResult 29
3.2.31 ~~ProductID~~FusionScore 29
3.2.32 ~~QualityData~~GenericRequestParameters 29
3.2.33 ~~ResponseStatus~~IdentifySubjectResultType 30
3.2.34 ~~ReturnCode~~InformationType 30
3.2.35 ~~Score~~ListFilterType 30
3.2.36 ~~TokenType~~MatchType 30
3.2.37 ~~VendorIdentifier~~ProcessingOptionsType 31
3.2.38 ~~Version~~ProductID 31
3.2.39 ~~VersionType~~QualityData 31
~~4 .... BIAS Messages~~
.... 3.2.40 ResponseStatus 31
~~4.1 Primitive Operations ....~~ 3.2.41 ReturnCode 32
~~4.1.1 AddSubjectToGallery ....~~ 3.2.42 Score 32
~~4.1~~3.2 ~~CheckQuality~~.43 TokenResultType 32
~~4.1.3 ClassifyBiometricData ....~~ 3.2.44 TokenType 32
~~4.1.4 CreateSubject ....~~ 3.2.45 URI_BIR 33
~~4.1.5 DeleteBiographicData ....~~ 3.2.46 VendorIdentifier 33
~~4.1.6 DeleteBiometricData ....~~ 3.2.47 Version 33
~~4.1.7 DeleteSubject ....~~ 3.2.48 VersionType 33
~~4.1.8 DeleteSubjectFromGallery ....~~ 3.2.49 XML_BIR 33
~~4.1.9 GetIdentifySubjectResults ....~~ 4 BIAS Messages 34
4.1 ~~.10 IdentifySubject~~ Primitive Operations 34
4.1.~~11 ListBiographicData~~1 AddSubjectToGallery 34
4.1.~~12 ListBiometricData~~2 CheckQuality 35
4.1.~~13 PerformFusion~~3 ClassifyBiometricData 37
4.1.~~14 QueryCapabilities~~4 CreateSubject 39
4.1.~~15 RetrieveBiographicInformation~~5 DeleteBiographicData 40
4.1.~~16 RetrieveBiometricInformation~~6 DeleteBiometricData 41
4.1.~~17 SetBiographicData~~7 DeleteSubject 43
4.1.~~18 SetBiometricData~~8 DeleteSubjectFromGallery 44
4.1.~~19 TransformBiometricData~~9 GetIdentifySubjectResults 46
4.1.~~20 UpdateBiographicData~~10 IdentifySubject 48
4.1.~~21 UpdateBiometricData~~11 ListBiographicData 50

Copyright © OASIS Open 2009-2011. All Rights Reserved. Standards Track Work Product

4.1.22 VerifySubject12 ListBiometricData 53
4.2 Aggregate Operations1.13 PerformFusion 57
4.2.1 Enroll.14 QueryCapabilities 59
4.2.2 GetEnrollResults .... 4.1.15 RetrieveBiographicInformation 61
4.2.3 GetIdentifyResults .... 4.1.16 RetrieveBiometricInformation 63
4.2.4 GetVerifyResults1.17 SetBiographicData 65
4.2.5 Identify1.18 SetBiometricData 67
4.2.6 RetrieveInformation .... 4.1.19 TransformBiometricData 69
4.2.7 Verify .... 4.1.20 UpdateBiographicData 70
5 .... Message structure and rules .... 4.1.21 UpdateBiometricData 72
5.1 Purpose and constraints .... 4.1.22 VerifySubject 74
54.2 Message requirementsAggregate Operations 76
5.3 Handling binary data .... 4.2.1 Enroll 76
5.3.1 Base64 encoding .... 4.2.2 GetEnrollResults 77
54.2.3.2 Use of XOP GetIdentifyResults 79
5.4 Discovery .... 4.2.4 GetVerifyResults 81
5.5 Identifying operations .... 4.2.5 Identify 82
5.5.1 Operation name element .... 4.2.6 RetrieveInformation 84
5.5.2 WS-Addressing Action .... 4.2.7 Verify 85
5.6 Security .... 5 Message structure and rules 88
5.6.1 Use of SSL 3.0 or TLS 1.0Purpose and constraints 89
5.6.2 Data Origin AuthenticationMessage requirements 89
5.6.3 Message IntegrityHandling binary data 90
5.6.4 Message Confidentiality .... 5.3.1 Base64 encoding 91
5.6.5 CBEFF BIR security features .... 5.3.2 Use of XOP 91
5.6.6 Security Considerations .... 5.4 Discovery 91
5.6.7 Security of Stored Data .... 5.5 Identifying operations 91
5.6.8 Key Management .... 5.5.1 Operation name element 91
5.7 Use with other5.2 WS* standards-Addressing Action 92

Copyright © OASIS Open 2009-2011. All Rights Reserved.

5.8 Tailoring6 Security 93
6 .... Error handling
.... 5.6.1 Use of SSL 3.0 or TLS 1.0
.... 93
6.1 BIAS operation return codes .... 5.6.2 Data Origin Authentication
.... 93
5.6.2 SOAP fault codes3 Message Integrity 94
7 .... Conformance
.... 5.6.4 Message Confidentiality
.... 94
Annex A. XML Schema .... 5.6.5 CBEFF BIR security features
.... 94
Annex B. Use Cases (non-normative) .... 5.6.6 Security Considerations
.... 94
B.1 Verification Use Case .... 5.6.7 Security of Stored Data
.... 95
B.2 Asynchronous Verification .... 5.6.8 Key Management
.... 95
B.3 Primitive Verification .... 5.7 Use with other WS* standards
.... 95
B.4 Identification Use Case .... 5.8 Tailoring
.... 95
B.5 Biometric Enrollment 6
Error handling 96
B.6 Primitive Enrollment .... 6.1 BIAS operation return codes
.... 96
Annex C. Samples (non-normative) .... 6.2 SOAP fault codes
.... 96
C.1 Create Subject Request/Response Example 7
Conformance 97
C.2 Set Biographic Data Request/Response Example .... Annex A. XML Schema
.... 98
C.3 Set Biometric Data Request/Response Example .... Annex B. Use Cases (non-normative)
.... 186
Annex D. Acknowledgements .... B.1 Verification Use Case
.... 186
Annex E. Revision History .... B.2 Asynchronous Verification
.... 187

B.3 Primitive Verification 188
B.4 Identification Use Case 189
B.5 Biometric Enrollment 191
B.6 Primitive Enrollment 192
Annex C. Samples (non-normative) 193
C.1 Create Subject Request/Response Example 193
C.2 Set Biographic Data Request/Response Example 195
C.3 Set Biometric Data Request/Response Example 196
Annex D. Acknowledgements 199

Copyright © OASIS Open 2009-2011. All Rights Reserved.

Annex E. Revision History.....200

Copyright © OASIS Open 2009-2011. All Rights Reserved.

1 Introduction

1.1 Purpose/Scope

This Organization for the Advancement of Structured Information Standards (OASIS) Biometric Identity Assurance Services (BIAS) profile specifies how to use the eXtensible Markup Language (XML) ~~[XML10]~~[XML10] defined in ANSI INCITS 442-2008 – Biometric Identity Assurance Services ~~[INCITS-BIAS]~~[INCITS-BIAS] to invoke Simple Object Access Protocol (SOAP) -based services that implement BIAS operations. These SOAP-based services enable an application to invoke biometric identity assurance operations remotely in a Services Oriented Architecture (SOA) infrastructure.

Not included in the scope of BIAS is the incorporation of biometric authentication as an integral component of an authentication or security protocol. (However, BIAS services may be leveraged to implement biometric authentication in the future.)

1.2 Overview

In addition to this introduction, this standard includes the following:

- Clause 2 presents the design concepts and architecture for invoking SOAP-based services that implement BIAS operations.
- Clause 3 presents the namespaces necessary to implement this profile, INCITS BIAS data elements, and identifies relationships to external data definitions.
- Clause 4 specifies the content of the BIAS messages.
- Clause 5 presents the BIAS message structure, as well as rules and considerations for its application.
- Clause 6 presents information on error handling.
- Clause ~~7specifies~~7 specifies conformance requirements.
- Annexes include the OASIS BIAS XML schema/sample Web Service Definition Language (WSDL), use cases, sample code, acknowledgements, and the revision history of this profile.

1.3 Background

In late 2005/early 2006, a gap was identified in the existing biometric standards portfolio with respect to biometric services. The Biometric Identity Assurance Services standard proposal was for a collaborative effort between government and private industry to provide a services-based framework for delivering identity assurance capabilities, allowing for platform and application independence. This standard proposal required the attention of two major technical disciplines: biometrics and service architectures. The expertise of both disciplines was required to ensure the standard was technically sound, market relevant, and achieved widespread adoption. The International Committee for Information Technology Standards (INCITS) M1 provided the standards leadership relevant to biometrics, defining the “taxonomy” of biometric operations and data elements. OASIS provided the standards leadership relevant to service architectures with an initial focus on web services, defining the schema and SOAP messaging.

The driving requirements of the BIAS standard proposal were to provide the ability to remotely invoke biometric operations across an SOA infrastructure; to provide business level operations without constraining the application/business logic that implements those operations; to be as generic as possible – technology, framework, & application domain independent; and to provide basic capabilities that can be used to construct higher level, aggregate/composite operations.

Copyright © OASIS Open 2009-2011. All Rights Reserved.

1.4 Relationship to Other Standards

This OASIS BIAS profile comprises a companion standard to ANSI INCITS 442-2008 – Biometric Identity Assurance Services, which defines the BIAS requirements and taxonomy, specifying the identity assurance operations and the associated data elements. This OASIS BIAS profile specifies the design concepts and architecture, data model and data dictionary, message structure and rules, and error handling necessary to invoke SOAP-based services that implement BIAS operations.

Together, the BIAS standard and the BIAS profile provide an open framework for deploying and remotely invoking biometric-based identity assurance capabilities that can be readily accessed across an SOA infrastructure.

This relationship allows the leveraging of the biometrics and web services expertise of the two standards development organizations. Existing standards are available in both domains and many of these standards will provide the foundation and underlying capabilities upon which the biometric services depend.

1.5 Terminology

The key words “MUST”, “MUST NOT”, “REQUIRED”, “SHALL”, “SHALL NOT”, “SHOULD”, “SHOULD NOT”, “RECOMMENDED”, “MAY”, and “OPTIONAL” in this document are to be interpreted as described in ~~[RFC2119]~~ [RFC2119].

Formatted: Font: Bold

The following additional terms and definitions are used:

Note: The terms and definitions specified in INCITS (InterNational Committee for Information Technology Standards) (Project 1823-D) also apply to this Standard.

BIAS operation and data element names are not defined here, but in their respective sections.

BIAS
: Biometric Identity Assurance Services

BIR
: Biometric Information Record

ESB
: Enterprise Service Bus

HTTP
: HyperText Transfer Protocol

HTTPS
: HyperText Transfer Protocol over SSL or HTTP Secure

IRI
: Internationalized Resource Identifier

SOA
: Service-Oriented Architecture

SOAP
: Simple Object Access Protocol

SSL
: Secure Sockets Layer

TLS
: Transport Layer Security

UDDI
: Universal Description, Discovery, and Integration

URI
: Uniform Resource Identifier

VPN
: Virtual Private Network

WSDL
: Web Services Description Language

WSS

Copyright © OASIS Open 2009-2011. All Rights Reserved.

Web Services Security

XML

eXtensible Markup Language

CBEFF

Common Biometric Exchange Formats Framework - data elements and BIR formats specified in ISO/IEC 19785-1

BIAS implementation

software entity that is capable of creating, processing, sending, and receiving BIAS messages

BIAS endpoint

runtime entity, identified by an endpoint URI/IRI, capable of sending and receiving BIAS messages, and containing a running BIAS implementation

BIAS message

message that can be sent from a BIAS endpoint to another BIAS endpoint through a BIAS link channel

BIAS request message

BIAS message conveying a request for an action to be performed by the receiving BIAS endpoint

BIAS response message

BIAS message conveying a response to a prior BIAS requestmessage

1.6 References

1.6.1 Normative References

[RFC2119] S. Bradner, *Key words for use in RFCs to Indicate Requirement Levels*, IETF RFC 2119, March 1997.
http://www.ietf.org/rfc/rfc2119.txt

[CBEFF] ISO/~~IEC 19785~~IEC19785, Information technology – Common Biometric Exchange Formats Framework – Part 1: Data element specification & Part 3: Patron format specifications
http://www.iso.org

[DATE-TIME] ISO 8601:2004, Data elements and interchange formats — Information interchange — Representation of dates and times
http://www.iso.org

[INCITS-BIAS] ANSI INCITS 442-~~2008~~2010, Biometric Identity Assurance Services (BIAS), ~~May 2008~~July 2010
http://www.incits.org

[IRI] M. Duerst, et al, Internationalized Resouce Identifiers, W3C RFC3987, January 2005
http://www.ietf.org/rfc/rfc3987.txt

[SOAP11]- Simple Object Access Protocol (SOAP) 1.1, 8 May 2000
http://www.w3.org/TR/2000/NOTE-SOAP-20000508/

[URI]- T. Berners-Lee, R. Fielding, L. Masinter, *Uniform Resource Identifiers (URI): Generic Syntax*, RFC 3986, MIT/LCS, U.C. Irvine, Xerox Corporation, January

Formatted: Underline color: Auto
Field Code Changed
Formatted: Underline color: Auto
Field Code Changed
Formatted: English (U.S.)
Formatted: Default Paragraph Font
Formatted: English (U.S.)
Field Code Changed
Field Code Changed

Copyright © OASIS Open 2009-2011. All Rights Reserved.

2005.
~~http://ietf.org/rfc/rfc3986~~http://ietf.org/rfc/rfc3986

[UTF-8] ISO/IEC 10646:2003, Information technology — Universal Multiple-Octet Coded Character Set (UCS)
~~http://www.iso.org~~
http://www.iso.org

[WS-Addr] W3C Recommendation, Web Services Addressing 1.0 - Core, and Web Services Addressing 1.0 - SOAP Binding, 9 May 2006
~~http://www.w3.org/2002/ws/addr/~~ http://www.w3.org/2002/ws/addr/

[WS-I-Basic] Basic Profile Version 1.1, 10 April 2006
http://www.ws-i.org/Profiles/BasicProfile-1.1-2006-04-10.html

[WS-I-Bind] Web Services-Interoperability Organization (WS-I) Simple SOAP Binding Profile Version 1.0, 24 August 2004
http://www.ws-i.org/Profiles/SimpleSoapBindingProfile-1.0-2004-08-24.html

[WSDL11] Web Services Description Language (WSDL) 1.1, 15 March 2001
http://www.w3.org/TR/2001/NOTE-wsdl-20010315

[XML 10] Extensible Markup Language (XML) 1.0, 16 August 2006
http://www.w3.org/TR/2006/REC-xml-20060816/

[XOP] XML-binary Optimized Packaging, W3C Recommendation, 25 January 2005
http://www.w3.org/TR/2005/REC-xop10-20050125/

1.6.2 Non-Normative References

[BioAPI] ISO/IEC 19784-1:2006, Information technology – Biometric Application Programming Interface – Part 1: BioAPI Specification
~~http://www.iso.org~~http://www.iso.org

[BIO SEC] ISO 19092 Financial services -- Biometrics -- Security framework
http://www.iso.org

[EBTS-DOD] Department of ~~Defense Electronic~~DefenseElectronic Biometric ~~Transmission Specification~~TransmissionSpecification, Version 2.0, 27 March 2009
http://www.biometrics.dod.mil/CurrentInitiatives/Standards/~~EBTS~~dodebts.aspx

[EBTS-FBI] IAFIS-DOC-01078-8.1, "Electronic Biometric Transmission Specification (EBTS)", Version 8.1, November 19, 2008, Federal Bureau of Investigation, Criminal Justice Information Services Division
~~http://~~ https://www.fbibiospecs.org

[EFTS] IAFIS-DOC-01078-7, "Electronic Fingerprint Transmission Specification (EFTS)", Version 7.1, May 2, 2005, Federal Bureau of Investigation, Criminal Justice Information Services Division
~~http://~~ https://www.fbibiospecs.org

[HR-XML] HR-XML Consortium Library, 2007 April 15
http://~~www~~.hr-xml.org

Field Code Changed
Field Code Changed
Field Code Changed
Field Code Changed
Formatted: English (U.S.)
Formatted: Font color: Auto, German (Germany)
Field Code Changed
Formatted: Default Paragraph Font, Font color: Black
Field Code Changed
Formatted: English (U.S.)
Formatted: Default Paragraph Font, Underline color: Custom Color(RGB(0,56,168)), Font color: Black
Field Code Changed
Formatted: English (U.S.)
Formatted: Default Paragraph Font, Underline color: Custom Color(RGB(0,56,168)), Font color: Black
Field Code Changed
Formatted: English (U.S.)
Formatted: Default Paragraph Font, Font color: Black
Field Code Changed
Formatted: English (U.S.)

Copyright © OASIS Open 2009-2011. All Rights Reserved.

[INT-I] Interpol Implementation of ANSI/NIST ITL1-2000, Ver 4.22b, October 28, 2005, The Interpol AFIS Expert Group
http://~~-~~www.interpol.int

[NIEM] National Information Exchange Model (NIEM), Ver 2.0, June 2007, US DOJ/DHS
http://www.~~-www-~~niem.gov

[RFC2246] T. Dierks & C. Allen, ~~-~~*The TLS Protocol, Version 1.0*, January 1999
http://www.ietf.org/rfc/rfc2246.txt

[RFC2617]~~-~~ J. Franks, et al, *HTTP Authentication: Basic and Digest Access Authentication*, June 1999
~~http://www.ietf.org/rfc/rfc2617.txt~~http://www.ietf.org/rfc/rfc2617.txt

[RFC3280]~~-~~ R. Housley, et al, Internet X.509 Public Key Infrastructure Certificate and Certificate Revocation List (CRL) Profile, April 2002
http://www.ietf.org/rfc/rfc3280.txt

[SAML] ~~OASIS Standard, ~~ Security Assertion Markup Language (SAML~~) 2.0)~~, Oasis Standard, March 2005
~~http://docs.oasis-open.org/security/saml/v2.0/saml-core-2.0-os.pdf~~
http://docs.oasis-open.org/security/saml/v2.0/saml-core-2.0-os.pdf

[SAML SEC] ~~OASIS Standard, ~~ Security and Privacy Considerations for the OASIS Security Assertion Markup Language (SAML) V2.0, Oasis Standard, 15 March 2005
~~http://docs.oasis-open.org/security/saml/v2.0/saml-sec-consider-2.0-os.pdf~~
http://docs.oasis-open.org/security/saml/v2.0/saml-sec-consider-2.0-os.pdf

[SSL3]~~-~~ SSL 3.0 Specification
~~http://www.freesoft.org/CIE/Topics/ssl-draft/3-SPEC.HTM~~http://www.freesoft.org/CIE/Topics/ssl-draft/3-SPEC.HTM

[WSS] ~~OASIS Standard, ~~ Web Services Security: SOAP Message Security 1.1, (WS-Security 2004), OASIS Standard Specification, 1 February 2006
~~http://www.oasis-open.org/committees/download.php/16790/wss-v1.1-spec-os-SOAPMessageSecurity.pdf~~http://www.oasis-open.org/committees/download.php/16790/wss-v1.1-spec-os-SOAPMessageSecurity.pdf

[X509]~~-~~ X.509: Information technology - Open Systems Interconnection - The Directory: Public-key and attribute certificate frameworks, ITU-T, August 2005
http://www.itu.int/rec/T-REC-X.509-200508-I

[xNAL] ~~OASIS Committee Specification 02, ~~Customer Information Quality Specifications Version 3.0: Name (xNL), Address (xAL), Name and Address (xNAL) and Party (xPIL), Committee Specification 02, 20 September 2008
~~http://www.oasis-open.org/committees/tc_home.php?wg_abbrev=ciq#download~~

http://www.oasis-open.org/committees/tc_home.php?wg_abbrev=ciq

Formatted: Default Paragraph Font, Font color: Black
Field Code Changed
Formatted: German (Germany)
Formatted: Default Paragraph Font, Underline color: Custom Color(RGB(0,56,168)), Font color: Black
Field Code Changed
Formatted: German (Germany)
Formatted: German (Germany)
Formatted: German (Germany)
Formatted: Default Paragraph Font, Font color: Black
Field Code Changed
Field Code Changed

Copyright © OASIS Open 2009-2011. All Rights Reserved.

2 Design Concepts and Architecture (non-normative)

2.1 Philosophy

Rather than define a totally new and unique messaging protocol for biometric services, this specification instead defines a method for using existing biometric and Web services standards to exchange biometric data and perform biometric operations.

2.2 Context

Today, biometric systems are being developed which collect, process, store and match biometric data for a variety of purposes. In many cases, data and/or capabilities need to be shared between systems or systems serve a number of different client stakeholders. As architectures move towards services-based frameworks, access to these biometric databases and services is via a Web services front-end. However, lack of standardization in this area has led implementers to develop customized services for each system/application.

BIAS is intended to provide a common, yet flexible, Web services interface that can be used within both closed and open SOA systems. Figure 1, below, depicts the context in which the BIAS messages will be implemented.

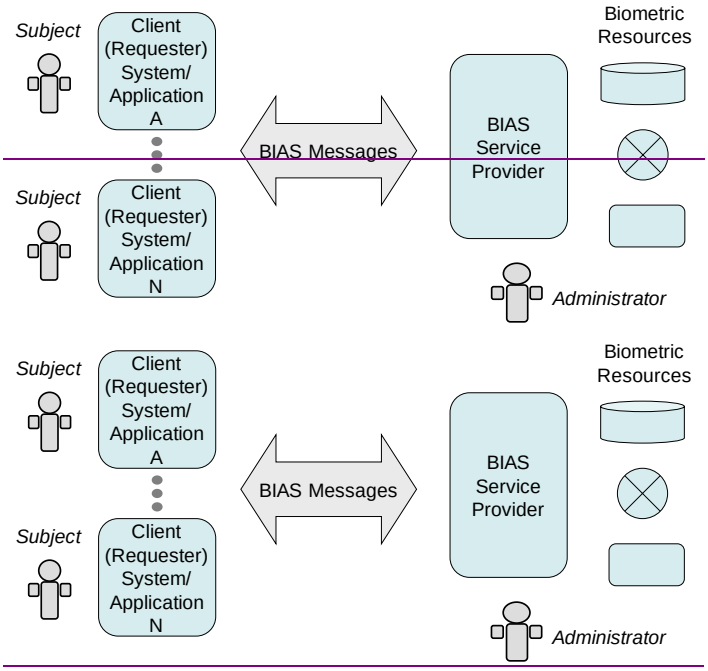

Figure 1. BIAS Context

Copyright © OASIS Open 2009-2011. All Rights Reserved.

The clients (requesters) may use standard discovery mechanisms (i.e., UDDI directories) to discover the BIAS service provider (implementation) or, particularly in closed systems, the URI/IRI and WSDL for the service provider may be known *a priori* by the client BIAS application developer.

2.3 Architecture

BIAS Web services are intended to be used within systems employing a services framework, such as a services-oriented architecture (SOA) (although implementations are not limited to this environment). As such, it is recognized that the clients may interact directly with the BIAS service provider or layers may exist between the client and the service provider, for example as an ESB or other application layer.

The BIAS Architecture as shown in Figure 2, in which:

- A Client request to the BIAS Web services may be triggered by a human interaction OR any proxy system such as an ESB.
- Client sends and receives SOAP messages that conform to the BIAS schemas
- ~~The calls~~Calls to the BIAS Implementation use OASIS Service Interfaces and Bindings (via WSDL)
- The BIAS implementation maps the service call to the appropriate internal API or set of APIs and returns data according to the service interface.

Note that services are represented as circles.

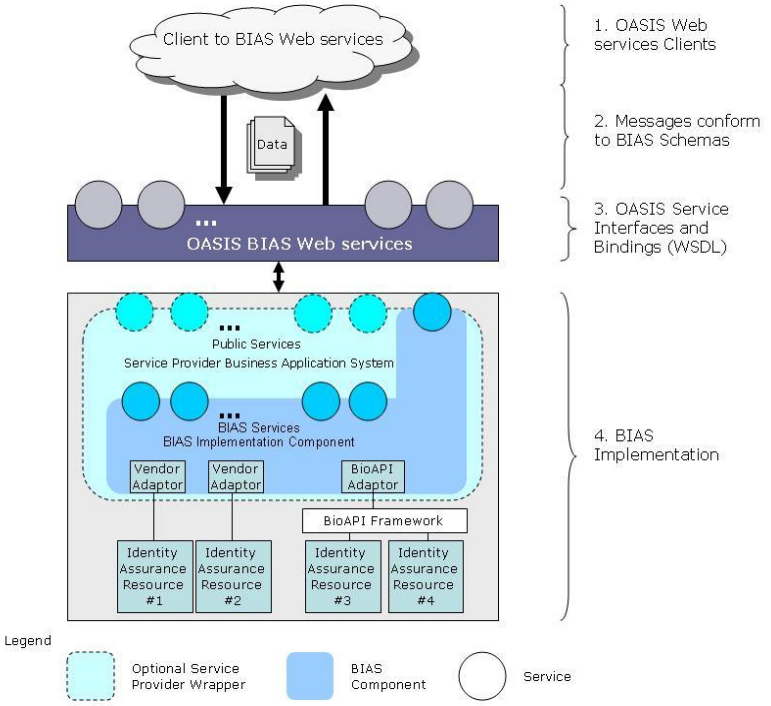

Figure 2. Representative BIAS Architecture

Copyright © OASIS Open 2009-2011. All Rights Reserved.

NOTE: It is possible that BIAS may also be used between the service provider and the managed resource (e.g., a biometric matcher).

At the heart of the BIAS messaging protocol are the concepts of BIAS messages and endpoints.

BIAS implementation

A BIAS implementation is a software entity that is capable of creating, processing, sending, and receiving BIAS messages. This standard does not define requirements for the BIAS implementation other than defining the messages and protocols used by the endpoints.

BIAS messages

A BIAS message is a one that can be sent from a BIAS endpoint to another BIAS endpoint over a TCP/IP link.

BIAS endpoints

A BIAS endpoint is a runtime entity, uniquely identified and accessed by an endpoint URI/IRI ~~[URI] [IRI],~~[URI] [IRI], capable of sending and receiving BIAS messages.

Note that when not publicly and directly exposed, the endpoints for purposes of this specification are the BIAS service provider exposing BIAS services and the component that directly interacts with that service provider, e.g., the business application or ESB, rather than the ultimate end client requester.

Copyright © OASIS Open 2009-2011. All Rights Reserved.

3 Data dictionary

This section describes the BIAS data elements used within BIAS messages (as defined in Clause 4). Common data elements are defined for use in one or more operations. These include common data types or return codes. BIAS data elements are defined in ANSI INCITS 442-~~2008~~2010. The elements, complex types and simple types described for the BIAS messages belong to the following namespace: http://docs.oasis-open.org/bias/ns/bias-1.0/. See Annex A for the XML schema.

NOTE: Biographic and biometric data included in a native XML format MAY contain elements referencing external namespaces (e.g., ansi-nist).

3.1 Documentation Conventions

Each common element has a section describing its content. Likewise, each operation has a section describing the request and response messages and the associated input and output parameters. The input and output of each message and the comment elements are detailed in a table as described in the figure below. ~~-~~Each field that forms part of the message request/response is detailed in the table.

Header Name	Description	Values	Value Meaning
Field	The name of the field.		
Type	The XML schema type of the field.		
#	The cardinality of the field	1	One occurrence
		0..1	Zero or one occurrence
		0..*	Zero or more occurrences
		1..*	One or more occurrences
?	Defines if the field must be present.	Y	Yes – is always required
		N	No – is not always required, an optional field.
		C	Conditional – requirement is dependent on system or message conditions.
Meaning	Gives a short description of the field's use		

Figure 3. BIAS Message Input/Output Dictionary Table Headings

Fields Hierarchy Explained:

To denote the field hierarchy the symbol ↳ is used to denote the child-of relationship.

All string types/elements MUST consist of ISO/IEC 10646 (Unicode) characters encoded in UTF-8 ~~[UTF-8]~~[UTF-8] (see ISO/IEC 10646:2003, Annex D).

Formatted: Space Before: 12 pt

Copyright © OASIS Open 2009-2011. All Rights Reserved.

3.2 Common Elements

3.2.1 ApplicationIdentifier

Type:	string
Description:	Identifies an application.
Min Length:	1
Max Length:	255

3.2.2 ApplicationUserIdentifier

Type:	string
Description:	Identifies an application user or instance.
Min Length:	1
Max Length:	255

3.2.3 BaseBIRType

Type:	Schema complexType
Description:	Base type for all BIR subtypes; see BinaryBIR, URI_BIR, and XML_BIR for currently available types.

~~3.2.3~~3.2.4 BIASBiometricDataType

Field	Type	#	?	Meaning
BIASBiometricDataType			Y	Wraps the various BIAS biometric types. The operations that use this type specify which elements are required.
↑↑BIRList	~~CBEFF_BIR_ListType~~ CBEFF_BIR_ListType	0..1	N	A list of CBEFF-BIR elements.
↑↑BIR	~~CBEFF_BIR_Type~~CBEFF_BIR_Type	0..1	N	Contains biometric information in either a non-XML or an XML representation.
↑↑InputBIR	~~CBEFF_BIR_Type~~CBEFF_BIR_Type	0..1	N	Maps to specific INCITS BIAS elements as required by that specification.
↑↑ReferenceBIR	~~CBEFF_BIR_Type~~CBEFF_BIR_Type	0..1	N	Maps to specific INCITS BIAS elements as required by that specification.
↑↑BiometricDataList	~~BiometricDataListType~~ BiometricDataListType	0..1	N	A list of biometric data elements.

Copyright © OASIS Open 2009-2011. All Rights Reserved.

304 ### ~~3.2.4~~3.2.5 BIASFaultCode

Type:	String
Description:	Error code referenced in a SOAP fault.

305 **BIASFaultCode Enumeration Values**

Value	Description
UNKNOWN_ERROR	The service failed for an unknown reason.
UNSUPPORTED_CAPABILITY	A requested capability is not supported by the service implementation.
INVALID_INPUT	The data in a service input parameter is invalid.
BIR_QUALITY_ERROR	Biometric sample quality is too poor for the service to succeed.
INVALID_BIR	The input BIR is empty or in an invalid or unrecognized format.
BIR_SIGNATURE_FAILURE	The service could not validate the signature, if used, on the input BIR.
BIR_DECRYPTION_FAILURE	The service could not decrypt an encrypted input BIR.
INVALID_ENCOUNTER_ID	The input encounter ID is empty or in an invalid format.
INVALID_SUBJECT_ID	The input subject ID is empty or in an invalid format.
UNKNOWN_SUBJECT	The subject referenced by the input subject ID does not exist.
UNKNOWN_GALLERY	The gallery referenced by the input gallery ID does not exist.
UNKNOWN_ENCOUNTER	The encounter referenced by the input encounter ID does not exist.
UNKNOWN_BIOGRAPHIC_FORMAT	The biographic data format is not known or not supported.
UNKNOWN_IDENTITY_CLAIM	The identity referenced by the input identity claim does not exist.
INVALID_IDENTITY_CLAIM	The identity claim requested is already in use.
NONEXISTANT_DATA	The data requested for deletion does not exist.

306 NOTES:

307 (1) See Clause 6 (Error handling) for an explanation of BIAS faults and return codes.

308 (2) Service provider MAY define additional values specific to their service implementation.

309 (3) See section 5.5 for additional information on BIAS security.

310 ### ~~3.2.5~~3.2.6 BIASFaultDetail

Field	Type	#	?	Meaning
BIASFaultDetail			Y	Defines the error information associated with a SOAP fault.
↳BIASFaultType	BIASFaultCode	1	Y	References an error code.

Copyright © OASIS Open 2009-2011. All Rights Reserved.

Field	Type	#	?	Meaning
↳BIASFaultMessage	string	1	Y	Provides a brief explanation of the fault.
↳BIASFaultDescription	string	0..1	N	Provides detailed information about a BIAS fault, such as trace details.

311 ### ~~3.2.6~~3.2.7 BIASIdentity

Field	Type	#	?	Meaning
BIASIdentity			Y	Defines a single element for encapsulating the data associated with an Identity. Includes the Identity's reference identifiers, biographic data, and biometric data. The operations that use this type specify which elements are required.
↳SubjectID	~~BIASIDType~~BIASIDType	0..1	C	A system unique identifier for a subject. Required as input to many operations.
↳IdentityClaim	~~BIASIDType~~BIASIDType	0..1	N	An identifier by which a subject is known to a particular gallery or population group.
↳EncounterID	~~BIASIDType~~BIASIDType	0..1	C	The identifier of an encounter associated with the subject. Required for encounter-centric models.
↳EncounterList	~~EncounterListType~~EncounterListType	0..1	N	A list of encounters associated with a subject.
↳BiographicData	~~BiographicDataType~~BiographicDataType	0..1	N	An Identity's biographic data.
↳BiographicDataElements	~~BiographicDataType~~BiographicDataType	0..1	N	An Identity's biographic data elements that are stored in the implementing system.
↳BiometricData	~~BIASBiometricDataType~~ BIASBiometricDataType	0..1	N	An Identity's biometric data.

312 ### ~~3.2.7~~3.2.8 BIASIDType

Type:	string
Description:	A BIAS Identifier.

Copyright © OASIS Open 2009-2011. All Rights Reserved.

3.2.9 BinaryBIR

Field	Type	#	?	Meaning
BinaryBIR	BaseBIRType		Y	Defines a BIR type of Binary
↳Binary	base64Binary	1	Y	BIR information in base64 binary format

~~3.2.8~~3.2.10 BiographicDataItemType

Field	Type	#	?	Meaning
BiographicDataItemType			Y	Defines a single biographic data element.
↳Name	string	1	Y	The name of the biographic data item.
↳Type	string	1	Y	The data type for the biographic data item.
↳Value	string	0..1	N	The value assigned to the biographic data item.

NOTE: This element can be used to transmit scanned identity documents or document information (e.g., passports, driver's license, birth certificates, utility bills, etc. required to establish an identity).

~~3.2.9~~3.2.11 BiographicDataSetType

Field	Type	#	?	Meaning
BiographicDataSetType			Y	Defines a set of biographic data that is formatted according to the specified format.
↳name	string	1	Y	The name of the biographic data format. Use these names for common formats: FBI-EFTS [EFTS], FBI-EBTS [EBTS-FBI], DOD-EBTS [EBTS-DOD], INT-I [INT-I], NIEM [NIEM], xNAL [xNAL], HR-XML [HR-XML].
↳version	string	0..1	N	The version of the biographic data format (e.g., "7.1" for FBI-EFTS or "2.0" for NIEM).
↳source	string	1	Y	Reference to a URI/IRI describing the biographic data format. For example: (FBI-EFTS and FBI-EBTS) www.fbibiospecs.org, (DOD-EBTS) www.biometrics.dod.mil, (INT-I) www.interpol.int, (NIEM) www.niem.gov, (xNAL) www.oasis-open.org, (HR-XML) www.hr-xml.org.
↳type	string	1	Y	The biographic data format type. Use these types for common formats: ASCII (e.g., for non-XML versions of FBI-EFTS, FBI-EBTS, DOD-EBTS, or INT-I), XML (e.g., for NIEM, xNAL, and HR-XML or future versions of FBI-EBTS).
↳*unspecified*	any	0..*	N	Biographic data formatted according to a specific format.

Formatted Table

Formatted: Font: Not Bold

Formatted: Font: Not Bold, Font color: Custom Color(RGB(0,0,204))

Formatted Table

Copyright © OASIS Open 2009-2011. All Rights Reserved.

~~BiographicDataSetType Attributes~~

~~Name~~	~~Type~~	~~Use~~	~~Meaning~~
~~name~~	~~string~~	~~REQUIRED~~	~~The name of the biographic data format. Use these names for common formats: FBI-EFTS [EFTS], FBI-EBTS [EBTS-FBI], DOD-EBTS [EBTS-DOD], INT-I [INT-I], NIEM [NIEM], xNAL [xNAL], HR-XML [HR-XML].~~
~~version~~	~~string~~	~~OPTIONAL~~	~~The version of the biographic data format (e.g., "7.1" for FBI-EFTS or "2.0" for NIEM).~~
~~source~~	~~string~~	~~REQUIRED~~	~~Reference to a URI/IRI describing the biographic data format. For example: (FBI-EFTS and FBI-EBTS) www.fbibiospecs.org, (DOD-EBTS) www.biometrics.dod.mil, (INT-I) www.interpol.int, (NIEM) www.niem.gov, (xNAL) www.oasis-open.org, (HR-XML) www.hr-xml.org.~~
~~type~~	~~string~~	~~REQUIRED~~	~~The biographic data format type. Use these types for common formats: ASCII (e.g., for non-XML versions of FBI-EFTS, FBI-EBTS, DOD-EBTS, or INT-I), XML (e.g., for NIEM, xNAL, and HR-XML or future versions of FBI-EBTS).~~

NOTE: Biographic data formats are not limited to those listed. The string value is not enumerated. If one of the common types are used, it MUST be indicated by the specified name values; however, the service provider MAY offer other formats. See INCITS 442 for further information.

~~3.2.10~~3.2.12 BiographicDataType

Field	Type	#	?	Meaning
BiographicDataType			Y	Defines a set of biographic data elements, utilizing either the ~~BiographicDataItemType~~BiographicDataItemType to represent a list of elements or the ~~BiographicDataSetType~~BiographicDataSetType to represent a complete, formatted set of biographic information. One of the following elements must be present.
↳LastName	string	0..1	~~C~~ N	The last name of a subject.
↳FirstName	string	0..1	~~C~~ N	The first name of a subject.
↳BiographicDataItems	BiographicDataItemType	0..1	N	A list of biographic data elements.
~~↳BiographicDataItem~~ ↳BiographicDataItems	~~BiographicDataItemType~~BiographicDataItemType	~~0~~1..*	~~C~~ N	A single biographic data element.

Copyright © OASIS Open 2009-2011. All Rights Reserved.

Field	Type	#	?	Meaning
↳Biographic DataSet	~~BiographicDataSetType~~BiographicDataSetType	0..1	~~C~~ N	A set of biographic data information.

NOTE: The implementer is given three choices for encoding biographic data:

- Encode only first and last name using the defined fields within BiographicDataType
- Define a list of biographic data elements using the BiographicDataItemType
- Use a pre-defined set of biographic data (e.g., as specified in another standard) using the BiographicDataSetType.

See also INCITS 442, section 8.1 for further information.

~~3.2.11~~3.2.13 BiometricDataElementType

Field	Type	#	?	Meaning
BiometricDataElementType			Y	Provides descriptive information about biometric data, such as the biometric type, subtype, and format, contained in the BDB of the CBEFF-BIR.
↳BiometricType	iso-iec19785-3-7: ~~Multiple-types~~MultipleTypesType	1	Y	The type of biological or behavioral data stored in the biometric record, as defined by CBEFF.
↳BiometricTypeCount	positiveInteger	0..1	N	The number of biometric records having the biometric type recorded in the biometric type field.
↳BiometricSubType	iso-iec19785-3-7: ~~Subtype~~SubtypeType	0..1	N	More specifically defines the type of biometric data stored in the biometric record, as defined by CBEFF.
↳BDBFormatOwner	~~iso-iec19785-3-7: Registered-int~~positiveInteger	1	Y	Identifies the standards body, working group, industry consortium, or other CBEFF biometric organization that has defined the format for the biometric data.
↳BDBFormatType	~~iso-iec19785-3-7: Registered-int~~positiveInteger	1	Y	Identifies the specific biometric data format specified by the CBEFF biometric organization recorded in the BDB Format Owner field.

Formatted Table

Formatted Table

NOTE: XML biometric metadata (BIR header elements) is aligned with ISO/IEC 19785-3, XML Patron Format. ~~[CBEFF]~~[CBEFF]

~~3.2.12~~3.2.14 BiometricDataListType

Field	Type	#	?	Meaning
BiometricDataListType			Y	A list of biometric data elements.

Copyright © OASIS Open 2009-2011. All Rights Reserved.

Field	Type	#	?	Meaning
↳BiometricDataElement	BiometricDataElementType	0..*	N	Data structure containing information about a biometric record.

~~3.2.13 CandidateListType~~

3.2.15 CandidateListResultType

Field	Type	#	?	Meaning
~~CandidateListType~~CandidateListResultType			Y	Defines a set of candidates, utilizing the ~~CandidateType~~CandidateType to represent each element in the set.
↳~~Candidate~~CandidateList	CandidateListType	~~0..*~~ 1	~~N~~ Y	~~A single~~The candidate list.

Formatted Table

Formatted: Underline, Font color: Blue

Field Code Changed

3.2.16 CandidateListType

Field	Type	#	?	Meaning
CandidateListType			Y	Defines a set of candidates, utilizing the CandidateType to represent each element in the set.
↳Candidate	CandidateType	0..*	N	A single candidate.

~~3.2.14~~3.2.17 CandidateType

Field	Type	#	?	Meaning
CandidateType			Y	Defines a single candidate as a possible match in response to a biometric identification request.
↳Score	~~Score~~Score	0..1	N	The match score.
↳Rank	integer	1	Y	The rank of the candidate in relation to other candidates for the same biometric identification operation.
↳BiographicData	~~BiographicDataType~~BiographicDataType	0..1	N	Biographic data associated with the candidate match.
↳BIRList	~~CBEFF_BIR_ListType~~ CBEFF_BIR_ListType	1	Y	Biometric data associated with the candidate match.

~~**CandidateType Attributes**~~

~~Name~~	~~Type~~	~~Use~~	~~Meaning~~

Copyright © OASIS Open 2009-2011. All Rights Reserved.

~~Name~~	~~Type~~	~~Use~~	~~Meaning~~
~~rank~~	~~integer~~	~~REQUIRED~~	~~The rank of the candidate in relation to other candidates for the same biometric identification operation.~~

342 ## ~~3.2.15~~3.2.18 CapabilityListType

Field	Type	#	?	Meaning
CapabilityListType			Y	Defines a set of capabilities.
↳Capability	~~CapabilityType~~CapabilityType	0..*	N	A single capability.

343 ## ~~3.2.16~~3.2.19 CapabilityName

Type:	string
Description:	A list of capability items.

344 **CapabilityName Enumeration Values**

Value	Description
AggregateInputDataOptional	A data element accepted as optional input by the implementing system for the aggregate services.
AggregateInputDataRequired	A data element required as input by the implementing system for the aggregate services.
AggregateProcessingOption	A processing option supported by the implementing system for the aggregate services.
AggregateReturnData	A data element returned by the implementing system for the aggregate services.
AggregateServiceDescription	Describes the processing logic of an aggregate service supported by the implementing system.
BiographicDataSet	Identifies a biographic data set supported by the implementing system.
CBEFFPatronFormat	A patron format supported by the implementing system.
ClassificationAlgorithmType	A classification algorithm type supported by the implementing system.
ConformanceClass	Identifies the conformance class of the BIAS implementation.
Gallery	A gallery or population group supported by the implementing system.
IdentityModel	Identifies whether the implementing system is person-centric or encounter-centric based.
MatchScore	Identifies the use of match scores returned by the implementing system.
QualityAlgorithm	A quality algorithm vendor and algorithm vendor product ID supported by the implementing system.
SupportedBiometric	A biometric type supported by the implementing system.

Copyright © OASIS Open 2009-2011. All Rights Reserved.

Value	Description
TransformOperation	A transform operation type supported by the implementing system.

~~3.2.17~~3.2.20 CapabilityType

Field	Type	#	?	Meaning
CapabilityType			Y	Defines a single capability supported by an implementing system.
↳CapabilityName	~~CapabilityName~~ CapabilityName	1	Y	The name of the capability.
↳CapabilityID	string	0..1	N	An identifier assigned to the capability by the implementing system.
↳CapabilityDescription	string	0..1	N	A description of the capability.
↳CapabilityValue	string	0..1	N	A value assigned to the capability.
↳CapabilitySupportingValue	string	0..1	N	A secondary value supporting the capability.
~~↳~~↳CapabilityAdditionalInfo	string	0..1	N	Contains additional information for the supported capability.

~~3.2.18~~3.2.21 CBEFF_BIR_ListType

Field	Type	#	?	Meaning
CBEFF_BIR_ListType			Y	A list of CBEFF-BIR elements.
↳BIR	~~CBEFF_BIR_Type~~CBEFF_BIR_Type	0..*	N	CBEFF structure containing information about a biometric sample.

~~3.2.19~~3.2.22 CBEFF_BIR_Type

Field	Type	#	?	Meaning
CBEFF_BIR_Type			Y	Represents biometric information, with either a non-XML or XML representation.
↳FormatOwner	positiveInteger	1	Y	Identifies the Patron format owner.
↳FormatType	positiveInteger	1	Y	Identifies the Patron format type.
↳BIR_Information		0..1	N	Describes what is contained in a BIR.
↳~~bir-info~~BIR_Info	iso-iec19785-3-7:~~BIR-info~~BIRInfoType	0..1	N	Contains information about the CBEFF-BIR.
↳~~bdb-info~~BDB_Info	iso-iec19785-3-7:~~BDB-info~~BDBInfoType	0..1	N	Contains information about the BDB in a simple CBEFF-BIR.

Copyright © OASIS Open 2009-2011. All Rights Reserved.

Field	Type	#	?	Meaning
↳sb-infoSB_Info	iso-iec19785-3-7:SB-infoSBInfoType	0..1	N	Contains information about the security block, if used, in a simple CBEFF-BIR.
↳BIR	BaseBIRType	1	Y	One of the following sub-elements must be present.: BinaryBIR, URI_BIR, or XML_BIR.
↳BinaryBIR	base64Binary	0..1	C	A non-XML CBEFF-BIR.
↳URI_BIR	anyURI/IRI	0..1	C	A URI/IRI reference to a CBEFF-BIR.
↳XML_BIR	iso-iec19785-3-7:BIR	0..1	C	An XML CBEFF-BIR, using the XML Patron Format as defined in ISO/IEC 19785-3:2007.

NOTE: The implementer is given three choices for encoding a BIR:

- As an XML BIR (following the XML Patron format as specified in [CBEFF][CBEFF] Part 3, Clause 13)
- As a reference to a URI (from which the receiver would retrieve the actual BIR)
- As a complete Base64 encoded binary (non-XML) BIR.

The latter two alternatives can use any CBEFF Patron Format. The optional BIR_Information provides a mechanism for exposing metadata associated with a BIR format that is not easily decoded (i.e., a non-XML BIR). See section 5.3 for more information on handling of binary data within BIAS and INCITS 442, Clause 8.2, for more information on representing biometric data.

CBEFF_BIR_Type Attributes

Name	Type	Use	Meaning
format-owner	iso-iec19785-3-7:Registered-int	REQUIRED	Identifies the Patron format owner.
format-type	iso-iec19785-3-7:Registered-int	REQUIRED	Identifies the Patron format type.

NOTE:

(1) XML BIRs MUST conform to ISO/IEC 19785-3 (clause 13, XML Patron Format); however, non-XML (binary) and URI BIRs MAY implement any CBEFF patron format.

(2) It is RECOMMENDED that only registered CBEFF patron formats be used; however, in closed systems, this may not be required.

Formatted: Indent: Left: 0"

3.2.203.2.23 Classification

Type:	string
Description:	The result of a classification.

3.2.213.2.24 ClassificationAlgorithmType

Type:	string

Copyright © OASIS Open 2009-2011. All Rights Reserved.

Description:	Type of classification algorithm that was used to perform the classification.

~~3.2.22~~3.2.25 ClassificationData

Field	Type	#	?	Meaning
ClassificationData			Y	Contains information on classification results and the algorithm used to determine the classification.
↳Classification	~~Classification~~Classification	1	Y	The result of the classification.
↳ClassificationAlgorithmType	~~ClassificationAlgorithmType~~ ClassificationAlgorithmType	1	Y	Identifies the type of classification algorithm that was used to perform the classification.

~~3.2.23~~3.2.26 EncounterListType

Field	Type	#	?	Meaning
EncounterListType			Y	Defines a set of encounters.
↳EncounterID	~~BIASIDType~~BIASIDType	0..*	N	The identifier of an encounter.

3.2.27 FusionDecision

Type:	string
Description:	The match decision assigned by the matching algorithm

~~3.2.24~~3.2.28 FusionInformationListType

Field	Type	#	?	Meaning
FusionInformationListType			Y	Contains at a minimum two sets of fusion input elements, as input to the ~~PerformFusion~~PerformFusion operation.
↳FusionElement	~~FusionInformationType~~FusionInformationType	2..*	Y	A set of fusion information.

~~3.2.25~~3.2.29 FusionInformationType

Field	Type	#	?	Meaning
FusionInformationType			Y	Represents the information necessary to perform a fusion operation.

Copyright © OASIS Open 2009-2011. All Rights Reserved.

Field	Type	#	?	Meaning
↳BiometricType	iso-iec19785-3-7: ~~Multiple-types~~MultipleTypesType	1	Y	The type of biological or behavioral data stored in the biometric record, as defined by CBEFF.
↳BiometricSubType	iso-iec19785-3-7: ~~Subtype~~SubtypeType	0..1	N	More specifically defines the type of biometric data stored in the biometric record.
↳AlgorithmOwner	string	1	Y	The owner or vendor of the algorithm used to determine the score or decision.
↳AlgorithmType	string	1	Y	The Algorithm Owner's identifier for the specific algorithm product and version used to determine the score or decision.
↳~~Score~~FusionResult	~~Score~~FusionResult	0..1	C	~~The similarity score assigned by the matching algorithm.~~ Either ~~a Score~~FusionScore or a ~~Decision~~FusionDecision element MUST be used.
~~↳Decision~~	~~string~~	~~0..1~~	~~C~~	~~The match decision assigned by the matching algorithm.~~ ~~Either a Score or a Decision element MUST be used.~~

371 ### 3.2.30 FusionResult

Type:	complexType
Description:	The base type for any resulting types which indicate the status of a Fusion operation

372 ### 3.2.31 FusionScore

Type:	Score
Description:	The similarity score assigned by the matching algorithm.

373

374 ### ~~3.2.26~~3.2.32 GenericRequestParameters

Field	Type	#	?	Meaning
GenericRequestParameters			Y	Common request parameters that can be used to identify the requester.
↳Application	~~ApplicationIdentifier~~ApplicationIdentifier	0..1	N	Identifies the requesting application.
↳ApplicationUser	~~ApplicationUserIdentifier~~ ApplicationUserIdentifier	0..1	N	Identifies the user or instance of the requesting application.

Copyright © OASIS Open 2009-2011. All Rights Reserved.

Field	Type	#	?	Meaning
↑└BIASOperationName	string	0..1	N	Identifies the BIAS operation that is being requested.

NOTE: See section 5.4 for alternatives for identifying the requested BIAS operation in a BIAS SOAP message.

3.2.33 IdentifySubjectResultType

Description:	A base type for all types that could be returned from the IdentifySubject operation

~~3.2.27~~3.2.34 InformationType

Field	Type	#	?	Meaning
InformationType			Y	Allows for an unlimited number of data element types, and it does not specify nor require any particular data element.
~~↑~~↑└*unspecified*	any	0..*	N	

~~3.2.28~~3.2.35 ListFilterType

Field	Type	#	?	Meaning
ListFilterType			Y	Provides a method to filter the amount of information returned in a search of biometric data.
↑└BiometricTypeFilters		1	Y	
~~↑~~↑└BiometricTypeFilter	iso-iec19785-3-7: ~~Multiple types~~MultipleTypesType	1..*	Y	Limits the returned information to a specific type of biometric, as defined by CBEFF.
~~↑~~↑└IncludeBiometricSubType	boolean	1	Y	A Boolean flag indicating if biometric subtype information should be returned.

~~3.2.29~~3.2.36 MatchType

Type:	boolean
Description:	The result of a fusion method.

Copyright © OASIS Open 2009-2011. All Rights Reserved.

3.2.303.2.37 ProcessingOptionsType

Field	Type	#	?	Meaning
ProcessingOptionsType			Y	BIAS aggregate operations support the ability to include various processing options which direct and possibly control the business logic for that operation. The ProcessingOptionsType provides a method to represent those options. Processing options SHOULD be defined by the implementing system.
↳Option	string	0..*	N	An option supported by the implementing system.

3.2.313.2.38 ProductID

Type:	string
Description:	The vendor's ID for a particular product.

3.2.323.2.39 QualityData

Field	Type	#	?	Meaning
QualityData			Y	Contains information about a biometric sample's quality and the algorithm used to compute the quality.
↳QualityScore	iso-iec19785-3-7: ~~Quality~~QualityType	0..1	N	The quality of a biometric sample.
↳AlgorithmVendor	~~VendorIdentifier~~VendorIdentifier	1	Y	The vendor of the quality algorithm used to determine the quality score.
↳AlgorithmVendorProductID	~~ProductID~~ProductID	1	Y	The vendor's ID for the algorithm used to determine the quality.
↳AlgorithmVersion	~~VersionType~~VersionType	0..1	N	The version of the algorithm used to determine the quality.

3.2.333.2.40 ResponseStatus

Field	Type	#	?	Meaning
ResponseStatus			Y	
↳Return	~~ReturnCode~~ReturnCode	1	Y	The return code indicates the return status of the operation.
↳Message	string	0..1	N	A short message corresponding to the return code.

Copyright © OASIS Open 2009-2011. All Rights Reserved.

~~3.2.34~~3.2.41 ReturnCode

Type:	unsignedLong
Description:	Return value specifying success or other condition.

ReturnCode Enumeration Values

Value	Description
0	Success

~~3.2.35~~3.2.42 Score

Type:	float
Description:	Match result or quality score.

NOTE: Matching scores MAY be in a standardized or proprietary form in terms of value range and interpretation. Quality scores, however, follow the definition found in ISO/IEC 19785-3, ~~section~~Clause 13.

~~3.2.36 TokenType~~

3.2.43 TokenResultType

Field	Type	#	?	Meaning
TokenResultType			Y	Defines a token that is returned for asynchronous processing.
↳TokenType	TokenType	1	Y	Defines a token that is returned for asynchronous processing.

3.2.44 TokenType

Field	Type	#	?	Meaning
TokenType			Y	Defines a token that is returned for asynchronous processing.
~~↳~~↳TokenValue	string	1	Y	A value returned by the implementing system that is used to retrieve the results to an operation at a later time.
~~↳~~↳Expiration	date	1	Y	A date and time at which point the token expires and the operation results are no longer guaranteed to be available.

NOTE: Date/time format is defined in INCITS 442 and is consistent with the date format specified in ISO/IEC 19785-3 and ISO 8601 ~~[DATE-TIME].~~ [DATE-TIME].See also Annex A for schema definition.

Copyright © OASIS Open 2009-2011. All Rights Reserved.

~~3.2.37 VendorIdentifier~~

3.2.45 URI_BIR

Field	Type~~:~~	~~string#~~	?	Meaning
URI_BIR	BaseBIRType		Y	Defines a BIR type of Binary
↳URI	anyURI	1	Y	The URI of the BIR

3.2.46 VendorIdentifier

Type:	string
Description:	Identifies a vendor.

NOTE: Vendor identifiers are registered with IBIA as the CBEFF registration authority (see ISO/IEC 19785-2). Registered biometric organizations are listed at: http://www.ibia.org/cbeff/_biometric_org.php.

~~3.2.38~~3.2.47 Version

Field	Type	#	?	Meaning
Version			Y	For a description or definition of each data element, see the referenced CBEFF standards in the CBEFF_BIR_Type_schema.
↳major	nonNegativeInteger	1	Y	
↳minor	nonNegativeInteger	1	Y	

~~3.2.39~~3.2.48 VersionType

Type:	string
Description:	The version of a component.

3.2.49 XML_BIR

Field	Type	#	?	Meaning
XML_BIR	BaseBIRType		Y	Defines a BIR type of Binary
↳XML	Iso-iec19785-3-7:BIRType	1	Y	BIR information in XML format

Inserted Cells
Formatted Table
Formatted: Font: Bold
Inserted Cells
Inserted Cells
Formatted: Space Before: 3 pt, Keep with next
Formatted: Underline color: Custom Color(RGB(0,56,168))
Field Code Changed

Copyright © OASIS Open 2009-2011. All Rights Reserved.

4 BIAS Messages

This section describes the BIAS messages implementing BIAS operations as defined in ANSI INCITS 442-~~2008~~2010. The operations are listed alphabetically, with each operation containing a request and a response message. The tables follow the conventions described in section 3.1.

4.1 Primitive Operations

4.1.1 AddSubjectToGallery

~~AddSubjectToGalleryRequest~~

~~AddSubjectToGalleryResponse~~

AddSubjectToGalleryRequest

AddSubjectToGalleryResponse

The AddSubjectToGallery operation registers a subject to a given gallery or population group. As an OPTIONAL parameter, the value of the claim to identity by which the subject is known to the gallery MAY be specified. This claim to identity MUST be unique across the gallery. If no claim to identity is specified, the subject ID (assigned with the ~~CreateSubject~~CreateSubject operation) will be used as the claim to identity. Additionally, in the encounter-centric model, the encounter ID associated with the subject's biometrics that will be added to the gallery MUST be specified.

Formatted: Default Paragraph Font, Font: 10 pt

Request Message

Field	Type	#	?	Meaning
~~AddSubjectToGalleryRequest~~AddSubjectToGallery			Y	Register a subject to a given gallery or population group.
AddSubjectToGalleryRequest		1	Y	
GenericRequestParameters	~~GenericRequestParameters~~ GenericRequestParameters	0..1	N	Common request parameters that can be used to identify the requester.
Application	~~ApplicationIdentifier~~ApplicationIdentifier	0..1	N	Identifies the requesting application.
ApplicationUser	~~ApplicationUserIdentifier~~ApplicationUserIdentifier	0..1	N	Identifies the user or instance of the requesting application.
BIASOperationName	string	0..1	N	Identifies the BIAS operation that is being requested: "AddSubjectToGallery".
GalleryID	~~BIASIDType~~BIASIDType	1	Y	The identifier of the gallery or population group to which the subject will be added.

Copyright © OASIS Open 2009-2011. All Rights Reserved.

Field	Type	#	?	Meaning
Identity	~~BIASIdentity~~BIASIdentity	1	Y	The identity to add to the gallery.
SubjectID	~~BIASIDType~~BIASIDType	1	Y	A system unique identifier for a subject.
IdentityClaim	~~BIASIDType~~BIASIDType	0..1	N	An identifier by which a subject is known to a particular gallery or population group. (This could be a username or account number, for example.)
EncounterID	~~BIASIDType~~BIASIDType	0..1	C	The identifier of an encounter associated with the subject. Required for encounter-centric models.

Formatted: Default Paragraph Font
Formatted: Space Before: 4 pt
Formatted: Default Paragraph Font
Formatted: Space Before: 4 pt
Formatted: Space Before: 4 pt
Formatted: Default Paragraph Font

Response Message

Field	Type	#	?	Meaning
AddSubjectToGalleryResponse			Y	The response to an AddSubjectToGallery operation.
AddSubjectToGalleryResponsePackage		1	Y	
ResponseStatus	~~ResponseStatus~~ResponseStatus	1	Y	Returned status for the operation.
Return	~~ReturnCode~~ReturnCode	1	Y	The return code indicates the return status of the operation.
Message	string	0..1	N	A short message corresponding to the return code.

Formatted Table

4.1.2 CheckQuality

~~CheckQualityRequest~~

~~CheckQualityResponse~~

CheckQualityRequest

CheckQualityResponse

The CheckQuality operation returns a quality score for a given biometric. The biometric input is provided in a CBEFF basic structure or CBEFF record, which in this specification is called a CBEFF-BIR. The algorithm vendor and algorithm vendor product ID MAY be optionally provided in order to request a particular algorithm's use in calculating the biometric quality. If an algorithm vendor is provided then the algorithm vendor product ID is REQUIRED. If no algorithm vendor is provided, the implementing system

Copyright © OASIS Open 2009-2011. All Rights Reserved.

will provide the algorithm vendor and algorithm vendor product ID that were used to calculate the biometric quality as output parameters.

Request Message

Field	Type	#	?	Meaning
~~CheckQualityRequest~~CheckQuality			Y	Calculate a quality score for a given biometric.
↳ CheckQualityRequest		1	Y	
↳ GenericRequestParameters	~~GenericRequestParameters~~ GenericRequestParameters	0..1	N	Common request parameters that can be used to identify the requester.
↳ Application	~~ApplicationIdentifier~~ApplicationIdentifier	0..1	N	Identifies the requesting application.
↳ ApplicationUser	~~ApplicationUserIdentifier~~ApplicationUserIdentifier	0..1	N	Identifies the user or instance of the requesting application.
↳ BIASOperationName	string	0..1	N	Identifies the BIAS operation that is being requested: “CheckQuality”.
↳ BiometricData	~~BIASBiometricDataType~~BIASBiometricDataType	1	Y	Data structure containing a single biometric sample for which a quality score is to be determined.
↳ BIR	~~CBEFF_BIR_Type~~CBEFF_BIR_Type	1	Y	The biometric sample.
↳ Quality	~~QualityData~~QualityData	0..1	N	Specifies a particular algorithm vendor and vender product ID.
↳ AlgorithmVendor	~~VendorIdentifier~~VendorIdentifier	1	Y	The vendor of the quality algorithm used to determine the quality score.

Copyright © OASIS Open 2009-2011. All Rights Reserved.

Field	Type	#	?	Meaning
↳AlgorithmVendorProductID	~~ProductID~~ProductID	1	Y	The vendor's ID for the algorithm used to determine the quality.

442 **Response Message**

Field	Type	#	?	Meaning
CheckQualityResponse			Y	The response to a CheckQuality operation.
↳CheckQualityResponsePackage		1	Y	
↳ResponseStatus	~~ResponseStatus~~ ResponseStatus	1	Y	Returned status for the operation.
↳Return	~~ReturnCode~~ReturnCode	1	Y	The return code indicates the return status of the operation.
↳Message	string	0..1	N	A short message corresponding to the return code.
↳QualityInfo	~~QualityData~~QualityData	1	Y	Contains the quality information for the submitted biometric sample.
↳QualityScore	iso-iec19785-3-7: ~~Quality~~QualityType	0..1	N	The quality of a biometric sample.
↳AlgorithmVendor	~~VendorIdentifier~~VendorIdentifier	1	Y	The vendor of the quality algorithm used to determine the quality score.
↳AlgorithmVendorProductID	~~ProductID~~ProductID	1	Y	The vendor's ID for the algorithm used to determine the quality.
↳AlgorithmVersion	~~VersionType~~VersionType	1	Y	The version of the algorithm used to determine the quality.

443 ### 4.1.3 ClassifyBiometricData

444 ~~ClassifyBiometricDataRequest~~

445 ~~ClassifyBiometricDataResponse~~

446 ClassifyBiometricDataRequest

447 ClassifyBiometricDataResponse

448 The ClassifyBiometricData operation attempts to classify a biometric sample. For example, a fingerprint
449 biometric sample may be classified as a whorl, loop, or arch (or other classification classes and sub-
450 classes).

Copyright © OASIS Open 2009-2011. All Rights Reserved.

To obtain the types of classification algorithms and classes, see the ~~QueryCapabilities~~QueryCapabilities operation.

Formatted: Default Paragraph Font, Font: 10 pt

Request Message

Field	Type	#	?	Meaning
~~ClassifyBiometricDataRequest~~ClassifyBiometricData			Y	Classifies a biometric sample.
ClassifyBiometricDataRequest		1	Y	
GenericRequestParameters	~~GenericRequestParameters~~GenericRequestParameters	0..1	N	Common request parameters that can be used to identify the requester.
Application	~~ApplicationIdentifier~~ApplicationIdentifier	0..1	N	Identifies the requesting application.
ApplicationUser	~~ApplicationUserIdentifier~~ApplicationUserIdentifier	0..1	N	Identifies the user or instance of the requesting application.
BIASOperationName	string	0..1	N	Identifies the BIAS operation that is being requested: "ClassifyBiometricData".
BiometricData	~~BIASBiometricDataType~~BIASBiometricDataType	1	Y	Data structure containing a single biometric sample for which the classification is to be determined.
BIR	~~CBEFF_BIR_Type~~CBEFF_BIR_Type	1	Y	The biometric sample.

Response Message

Field	Type	#	?	Meaning
ClassifyBiometricDataResponse			Y	The response to a ClassifyBiometricData operation, containing the classification of a biometric sample.
ClassifyBiometricDataResponsePackage		1	Y	
ResponseStatus	~~ResponseStatus~~ResponseStatus	1	Y	Returned status for the operation.
Return	~~ReturnCode~~ReturnCode	1	Y	The return code indicates the return status of the operation.

Copyright © OASIS Open 2009-2011. All Rights Reserved.

Field	Type	#	?	Meaning
Message	string	0..1	N	A short message corresponding to the return code.
ClassificationData	~~ClassificationData~~ ClassificationData	1	Y	Information on the results and type of classification performed.
Classification	~~Classification~~Classification	1	Y	The result of the classification.
ClassificationAlgorithmType	~~ClassificationAlgorithmType~~ClassificationAlgorithmType	1	Y	Identifies the type of classification algorithm that was used to perform the classification.

4.1.4 CreateSubject

~~CreateSubjectRequest~~

~~CreateSubjectResponse~~

CreateSubjectRequest

CreateSubjectResponse

The CreateSubject operation creates a new subject record and associates a subject ID to that record. As an optional parameter, the subject ID MAY be specified by the caller. If no subject ID is specified, the CreateSubject operation will generate one.

Request Message

Field	Type	#	?	Meaning
CreateSubject			Y	
CreateSubjectRequest		1	Y	
GenericRequestParameters	~~GenericRequestParameters~~ GenericRequestParameters	0..1	N	Common request parameters that can be used to identify the requester.
Application	~~ApplicationIdentifier~~ApplicationIdentifier	0..1	N	Identifies the requesting application.
ApplicationUser	~~ApplicationUserIdentifier~~ApplicationUserIdentifier	0..1	N	Identifies the user or instance of the requesting application.
BIASOperationName	string	0..1	N	Identifies the BIAS operation that is being requested: "CreateSubject".

Formatted: No underline, Font color: Auto

Copyright © OASIS Open 2009-2011. All Rights Reserved.

Response Message

Field	Type	#	?	Meaning
CreateSubjectResponse			Y	The response to a CreateSubject operation, containing the subject ID of the new subject record.
CreateSubjectResponsePackage		1	Y	
ResponseStatus	~~ResponseStatus~~ResponseStatus	1	Y	Returned status for the operation.
Return	~~ReturnCode~~ReturnCode	1	Y	The return code indicates the return status of the operation.
Message	string	0..1	N	A short message corresponding to the return code.
Identity	~~BIASIdentity~~BIASIdentity	1	Y	
SubjectID	~~BIASIDType~~BIASIDType	1	Y	A system unique identifier for a subject.

4.1.5 DeleteBiographicData

~~DeleteBiographicDataRequest~~

~~DeleteBiographicDataResponse~~

DeleteBiographicDataRequest

DeleteBiographicDataResponse

The DeleteBiographicData operation erases all of the biographic data associated with a given subject record. In the encounter-centric model the operation erases all of the biographic data associated with a given encounter, and therefore the encounter ID MUST be specified.

When deleting data, BIAS implementations MAY completely erase the information in order to prevent the ability to reconstruct a record in whole or in part, or they MAY track and record the deleted information for auditing and/or quality control purposes.

Request Message

Field	Type	#	?	Meaning
~~DeleteBiographicDataRequest~~DeleteBiographicData			Y	Erase all of the biographic data associated with a given subject record or, in the encounter-centric model, with a given encounter.
DeleteBiographicDataRequest		1	Y	

Copyright © OASIS Open 2009-2011. All Rights Reserved.

Field	Type	#	?	Meaning
GenericRequestParameters	~~GenericRequestParameters~~ GenericRequestParameters	0..1	N	Common request parameters that can be used to identify the requester.
Application	~~ApplicationIdentifier~~ApplicationIdentifier	0..1	N	Identifies the requesting application.
ApplicationUser	~~ApplicationUserIdentifier~~ApplicationUserIdentifier	0..1	N	Identifies the user or instance of the requesting application.
BIASOperationName	string	0..1	N	Identifies the BIAS operation that is being requested: "DeleteBiographicData" .
Identity	~~BIASIdentity~~BIASIdentity	1	Y	
SubjectID	~~BIASIDType~~BIASIDType	1	Y	A system unique identifier for a subject.
EncounterID	~~BIASIDType~~BIASIDType	0..1	C	The identifier of an encounter associated with the subject. Required for encounter-centric models.

Response Message

Field	Type	#	?	Meaning
DeleteBiographicDataResponse			Y	The response to a DeleteBiographicData operation.
DeleteBiographicDataResponsePackage		1	Y	
ResponseStatus	~~ResponseStatus~~ResponseStatus	1	Y	Returned status for the operation.
Return	~~ReturnCode~~ReturnCode	1	Y	The return code indicates the return status of the operation.
Message	string	0..1	N	A short message corresponding to the return code.

Formatted Table

Formatted Table

4.1.6 DeleteBiometricData

~~DeleteBiometricDataRequest~~

Copyright © OASIS Open 2009-2011. All Rights Reserved.

~~DeleteBiometricDataResponse~~

DeleteBiometricDataRequest

DeleteBiometricDataResponse

The DeleteBiometricData operation erases all of the biometric data associated with a given subject record. In the encounter-centric model the operation erases all of the biometric data associated with a given encounter, and therefore the encounter ID MUST be specified.

When deleting data, BIAS implementations MAY completely erase the information in order to prevent the ability to reconstruct a record in whole or in part, or they MAY track and record the deleted information for auditing and/or quality control purposes.

Request Message

Field	Type	#	?	Meaning
~~DeleteBiometricDataRequest~~DeleteBiometricData			Y	Erase all of the biometric data associated with a given subject record or, in the encounter-centric model, with a given encounter.
DeleteBiometricDataRequest		1	Y	
GenericRequestParameters	~~GenericRequestParameters~~ GenericRequestParameters	0..1	N	Common request parameters that can be used to identify the requester.
Application	~~ApplicationIdentifier~~ApplicationIdentifier	0..1	N	Identifies the requesting application.
ApplicationUser	~~ApplicationUserIdentifier~~ApplicationUserIdentifier	0..1	N	Identifies the user or instance of the requesting application.
BIASOperationName	string	0..1	N	Identifies the BIAS operation that is being requested: “DeleteBiometricData”.
Identity	~~BIASIdentity~~BIASIdentity	1	Y	
SubjectID	~~BIASIDType~~BIASIDType	1	Y	A system unique identifier for a subject.
EncounterID	~~BIASIDType~~BIASIDType	0..1	C	The identifier of an encounter associated with the subject. Required for encounter-centric models.

Copyright © OASIS Open 2009-2011. All Rights Reserved.

Response Message

Field	Type	#	?	Meaning
DeleteBiometricDataResponse			Y	The response to a DeleteBiometricData operation.
DeleteBiometricDataResponsePackage		1	Y	
ResponseStatus	~~ResponseStatus~~ResponseStatus	1	Y	Returned status for the operation.
Return	~~ReturnCode~~ReturnCode	1	Y	The return code indicates the return status of the operation.
Message	string	0..1	N	A short message corresponding to the return code.

Formatted Table

Formatted Table

4.1.7 DeleteSubject

~~DeleteSubjectRequest~~

~~DeleteSubjectResponse~~

DeleteSubjectRequest

DeleteSubjectResponse

The DeleteSubject operation deletes an existing subject record and, in an encounter-centric model, any associated encounter information from the system. This operation also removes the subject from any registered galleries.

When deleting a subject, BIAS implementations MAY completely erase the subject information in order to prevent the ability to reconstruct a record or records in whole or in part, or they MAY track and record the deleted information for auditing and/or quality control purposes.

Request Message

Field	Type	#	?	Meaning
~~DeleteSubjectRequest~~DeleteSubject			Y	Delete an existing subject record and, in an encounter-centric model, any associated encounter information.
DeleteSubjectRequest		1	Y	
GenericRequestParameters	~~GenericRequestParameters~~ GenericRequestParameters	0..1	N	Common request parameters that can be used to identify the requester.
Application	~~ApplicationIdentifier~~ApplicationIdentifier	0..1	N	Identifies the requesting application.

Copyright © OASIS Open 2009-2011. All Rights Reserved.

Field	Type	#	?	Meaning
ApplicationUser	~~ApplicationUserIdentifier~~ApplicationUserIdentifier	0..1	N	Identifies the user or instance of the requesting application.
BIASOperationName	string	0..1	N	Identifies the BIAS operation that is being requested: “DeleteSubject”.
Identity	~~BIASIdentity~~BIASIdentity	1	Y	The identity of the subject to delete.
SubjectID	~~BIASIDType~~BIASIDType	1	Y	A system unique identifier for a subject.

Response Message

Field	Type	#	?	Meaning
DeleteSubjectResponse			Y	The response to a DeleteSubject operation.
DeleteSubjectResponsePackage		1	Y	
ResponseStatus	~~ResponseStatus~~ResponseStatus	1	Y	Returned status for the operation.
Return	~~ReturnCode~~ReturnCode	1	Y	The return code indicates the return status of the operation.
Message	string	0..1	N	A short message corresponding to the return code.

4.1.8 DeleteSubjectFromGallery

~~DeleteSubjectFromGalleryRequest~~

~~DeleteSubjectFromGalleryResponse~~

DeleteSubjectFromGalleryRequest

DeleteSubjectFromGalleryResponse

The DeleteSubjectFromGallery operation removes the registration of a subject from a gallery or population group. The subject is identified by either the subject ID or the claim to identity that was specified in the ~~AddSubjectToGallery~~AddSubjectToGallery operation.

Request Message

Field	Type	#	?	Meaning
~~DeleteSubjectFromGalleryRequest~~DeleteSubjectFromGallery			Y	Remove the registration of a subject from a gallery or population group.
DeleteSubjectFromGalleryRequest		1	Y	

Copyright © OASIS Open 2009-2011. All Rights Reserved.

Field	Type	#	?	Meaning
GenericRequestParameters	~~GenericRequestParameters~~ GenericRequestParameters	0..1	N	Common request parameters that can be used to identify the requester.
Application	~~ApplicationIdentifier~~ApplicationIdentifier	0..1	N	Identifies the requesting application.
ApplicationUser	~~ApplicationUserIdentifier~~ApplicationUserIdentifier	0..1	N	Identifies the user or instance of the requesting application.
BIASOperationName	string	0..1	N	Identifies the BIAS operation that is being requested: "DeleteSubjectFromGallery".
GalleryID	~~BIASIDType~~BIASIDType	1	Y	The identifier of the gallery or population group from which the subject will be deleted.
Identity	~~BIASIdentity~~BIASIdentity	1	Y	The identity to remove from the gallery.
SubjectID	~~BIASIDType~~BIASIDType	0..1	C	A system unique identifier for a subject. Required if an Identity Claim is not provided.
IdentityClaim	~~BIASIDType~~BIASIDType	0..1	C	An identifier by which a subject is known to a particular gallery or population group. Required if a Subject ID is not provided.

513 ## Response Message

Field	Type	#	?	Meaning
DeleteSubjectFromGalleryResponse			Y	The response to a DeleteSubjectFromGallery operation.
DeleteSubjectFromGalleryResponsePackage				
ResponseStatus	~~ResponseStatus~~ ResponseStatus	1	Y	Returned status for the operation.
Return	~~ReturnCode~~ReturnCode	1	Y	The return code indicates the return status of the operation.

Formatted Table

Formatted Table

Copyright © OASIS Open 2009-2011. All Rights Reserved.

Field	Type	#	?	Meaning
↳Message	string	0..1	N	A short message corresponding to the return code.

Formatted Table

4.1.9 GetIdentifySubjectResults

~~GetIdentifySubjectResultsRequest~~

~~GetIdentifySubjectResultsResponse~~

GetIdentifyResultsRequest

GetIdentifySubjectResultsResponse

The GetIdentifySubjectResults operation retrieves the identification results for the specified token. This opereation is used in conjunction with the ~~IdentifySubject~~IdentifySubject operation. If the IdentifySubject operation is implemented as an asynchronous service, the implementing system returns a token and the GetIdentifySubjectResults operation is used to poll for the results of the original IdentifySubject request.

Request Message

Field	Type	#	?	Meaning
~~GetIdentifySubjectResultsRequest~~GetIdentifySubjectResults			Y	Retrieve the identification results for a specified token, which was returned by the ~~IdentifySubject~~IdentifySubject operation.
↳ GetIdentifySubjectResultsRequest		1	Y	
↳GenericRequestParameters	~~GenericRequestParameters~~ GenericRequestParameters	0..1	N	Common request parameters that can be used to identify the requester.
↳Application	~~ApplicationIdentifier~~ApplicationIdentifier	0..1	N	Identifies the requesting application.
↳ApplicationUser	~~ApplicationUserIdentifier~~ApplicationUserIdentifier	0..1	N	Identifies the user or instance of the requesting application.
↳BIASOperationName	string	0..1	N	Identifies the BIAS operation that is being requested: “GetIdentifySubjectResults”.
↳Token	~~TokenType~~TokenType	1	Y	A value used to retrieve the results of an IdentifySubject request.

Copyright © OASIS Open 2009-2011. All Rights Reserved.

Field	Type	#	?	Meaning
↑L TokenValue	string	1	Y	A value returned by the implementing system that is used to retrieve the results to an operation at a later time.
↑L Expiration	date	1	Y	A date and time at which point the token expires and the operation results are no longer guaranteed to be available.

524 **Response Message**

Field	Type	#	?	Meaning
GetIdentifySubjectResultsResponse			Y	The response to a GetIdentifySubjectResults operation, which includes a candidate list.
↑L GetIdentifySubjectResultsResponsePackage		1	Y	
↑L ResponseStatus	~~ResponseStatus~~ResponseStatus	1	Y	Returned status for the operation.
↑L Return	~~ReturnCode~~ReturnCode	1	Y	The return code indicates the return status of the operation.
↑L Message	string	0..1	N	A short message corresponding to the return code.
↑L CandidateList	~~CandidateListType~~CandidateListType	1	Y	A rank-ordered list of candidates that have a likelihood of matching the input biometric sample.
↑L Candidate	~~CandidateType~~CandidateType	0..*	N	A single candidate.
↑L Score	~~Score~~Score	0..1	N	The match score.
↑L BiographicData	~~BiographicDataType~~BiographicDataType	0..1	N	Biographic data associated with the candidate match.
↑L BIRList	~~CBEFF_BIR_ListType~~CBEFF_BIR_ListType	1	Y	Biometric data associated with the candidate match.
↑L BIR	~~CBEFF_BIR_Type~~CBEFF_BIR_Type	0..*	N	CBEFF structure containing information about a biometric sample.

Copyright © OASIS Open 2009-2011. All Rights Reserved.

4.1.10 IdentifySubject

~~IdentifySubjectRequest~~

~~IdentifySubjectResponse~~

IdentifySubjectRequest

IdentifySubjectResponse

The IdentifySubject operation performs an identification search against a given gallery for a given biometric, returning a rank-ordered candidate list of a given maximum size.

If the IdentifySubject operation is implemented as a synchronous service, the implementing system immediately processes the request and returns the results in the candidate list. If the IdentifySubject operation is implemented as an asynchronous service, the implementing system returns a token, which is an indication that the request is being handled asynchronously. In this case, the ~~GetIdentifySubjectResults~~GetIdentifySubjectResults operation is used to poll for the results of the IdentifySubject request.

Request Message

Field	Type	#	?	Meaning
~~IdentifySubjectRequest~~IdentifySubject			Y	Perform an identification search against a given gallery for a given biometric.
IdentifySubjectRequest		1	Y	
GenericRequestParameters	~~GenericRequestParameters~~ GenericRequestParameters	0..1	N	Common request parameters that can be used to identify the requester.
Application	~~ApplicationIdentifier~~ApplicationIdentifier	0..1	N	Identifies the requesting application.
ApplicationUser	~~ApplicationUserIdentifier~~ApplicationUserIdentifier	0..1	N	Identifies the user or instance of the requesting application.
BIASOperationName	string	0..1	N	Identifies the BIAS operation that is being requested: “IdentifySubject”.
GalleryID	~~BIASIDType~~BIASIDType	1	Y	The identifier of the gallery or population group which will be searched.
Identity	~~BIASIdentity~~BIASIdentity	1	Y	Contains the BIR, a data structure containing the biometric sample for the search.
BiometricData	~~BIASBiometricDataType~~BIASBiometricDataType	1	Y	An Identity’s biometric data.

Copyright © OASIS Open 2009-2011. All Rights Reserved.

Field	Type	#	?	Meaning
↳BIR	~~CBEFF_BIR_Type~~CBEFF_BIR_Type	1	Y	Contains biometric information in either a non-XML or an XML representation.
↳MaxListSize	positiveInteger	1	Y	The maximum size of the candidate list that should be returned.

Response Message

Field	Type	#	?	Meaning
IdentifySubjectResponse			Y	The response to an IdentifySubject operation, returning a rank-ordered candidate list.
↳IdentifySubjectResponsePackage		1	Y	
↳ResponseStatus	~~ResponseStatus~~ResponseStatus	1	Y	Returned status for the operation.
↳Return	~~ReturnCode~~ReturnCode	1	Y	The return code indicates the return status of the operation.
↳Message	string	0..1	N	A short message corresponding to the return code.
↳CandidateList	~~CandidateListType~~CandidateListResultType (see IdentifySubjectResultType)	0..1	C	A rank-ordered list of candidates that have a likelihood of matching the input biometric sample (i.e., exceed the system threshold). Rank ordering is from highest to lowest match score. Returned with successful synchronous request processing.
↳Candidate	~~CandidateType~~CandidateType	0..*	N	A single candidate.
↳Score	string	0..1	N	The match score.
↳BiographicData	~~BiographicDataType~~BiographicDataType	0..1	N	Biographic data associated with the candidate match.
↳BIRList	~~CBEFF_BIR_ListType~~CBEFF_BIR_ListType	1	Y	Biometric data associated with the candidate match.

Copyright © OASIS Open 2009-2011. All Rights Reserved.

Field	Type	#	?	Meaning
↳BIR	~~CBEFF_BIR_Type~~CBEFF_BIR_Type	0..*	N	CBEFF structure containing information about a biometric sample.
↳Token	~~TokenType~~TokenResultType (see IdentifySubjectResultType)	0..1	C	A token used to retrieve the results of the IdentifySubject operation. Returned with asynchronous request processing.
↳TokenValue	string	1	Y	A value returned by the implementing system that is used to retrieve the results to an operation at a later time.
↳Expiration	date	1	Y	A date and time at which point the token expires and the operation results are no longer guaranteed to be available.

NOTES:

(1) In the event that the number of candidates exceeding the threshold exceeds the MaxListSize, the system will determine which candidate is included in the last position of the rank ordered candidate list (i.e., in the event of a tie).

(2) Requesters MAY NOT change the system thresholds.

4.1.11 ListBiographicData

~~ListBiographicDataRequest~~

~~ListBiographicDataResponse~~

ListBiographicDataRequest

ListBiographicDataResponse

The ListBiographicData operation lists the biographic data elements stored for a subject using the Biographic Data Elements output parameter. Note that no actual biographic data is returned by this operation (see the ~~RetrieveBiographicInformation~~RetrieveBiographicInformation operation to obtain the biographic data). In the encounter-centric model, an encounter ID MAY be specified to indicate that only the biographic data elements stored for that encounter should be returned. If an encounter ID is not specified and encounter data exists for the subject, the operation returns the list of encounter IDs which contain biographic data using the Encounter List output parameter, and the Biographic Data Elements output parameter is empty.

Formatted: Font: 10 pt

Request Message

Field	Type	#	?	Meaning
~~ListBiographicDataRequest~~ListBiographicData			Y	Lists the biographic data elements stored for a subject.
↳ListBiographicDataRequest		1	Y	

Copyright © OASIS Open 2009-2011. All Rights Reserved.

Field	Type	#	?	Meaning
GenericRequestParameters	~~GenericRequestParameters~~ GenericRequestParameters	0..1	N	Common request parameters that can be used to identify the requester.
Application	~~ApplicationIdentifier~~ApplicationIdentifier	0..1	N	Identifies the requesting application.
ApplicationUser	~~ApplicationUserIdentifier~~ApplicationUserIdentifier	0..1	N	Identifies the user or instance of the requesting application.
BIASOperationName	string	0..1	N	Identifies the BIAS operation that is being requested: “ListBiographicData”.
Identity	~~BIASIdentity~~BIASIdentity	1	Y	Identifies the subject or, in the encounter-centric model, a subject and an encounter.
SubjectID	~~BIASIDType~~BIASIDType	1	Y	A system unique identifier for a subject.
EncounterID	~~BIASIDType~~BIASIDType	0..1	N	The identifier of an encounter associated with the subject.

559 ## Response Message

Field	Type	#	?	Meaning
ListBiographicDataResponse			Y	The response to a ListBiographicData request, containing a list of biographic data elements stored for a subject. In the encounter-centric model, the biographic data elements for a specific encounter are returned. If an encounter ID is not specified and encounter data exists for the subject, the list of encounter IDs which contain biographic data is returned.
ListBiographicDataResponsePackage		1	Y	

Copyright © OASIS Open 2009-2011. All Rights Reserved.

Field	Type	#	?	Meaning
ResponseStatus	~~ResponseStatus~~ResponseStatus	1	Y	Returned status for the operation.
Return	~~ReturnCode~~ReturnCode	1	Y	The return code indicates the return status of the operation.
Message	string	0..1	N	A short message corresponding to the return code.
Identity	~~BIASIdentity~~BIASIdentity	1	Y	Contains a list of biographic data elements associated with a subject or encounter; non-empty if the service was successful, biographic data exists, and either (a) the person-centric model is being used or (b) the encounter-centric model is being used and an encounter identifier was specified.
BiographicDataElements	~~BiographicDataType~~BiographicDataType	0..1	C	An Identity's biographic data elements that are stored in the implementing system.
BiographicDataItem	~~BiographicDataItemType~~ BiographicDataItemType	0..*	N	A single biographic data element.
Name	string	1	Y	The name of the biographic data item.
Type	string	1	Y	The data type for the biographic data item.

Copyright © OASIS Open 2009-2011. All Rights Reserved.

Field	Type	#	?	Meaning
↳EncounterList	~~EncounterListType~~EncounterListType	0..1	C	A list of encounter ID's associated with a subject and which contain biographic data; non-empty if the service was successful, biographic data exists, the encounter-centric model is being used, and an encounter identifier was not specified.
↳EncounterID	~~BIASIDType~~BIASIDType	0..*	N	The identifier of an encounter.

4.1.12 ListBiometricData

~~ListBiometricDataRequest~~

~~ListBiometricDataResponse~~

ListBiometricDataRequest

ListBiometricDataResponse

The ListBiometricData operation lists the biometric data elements stored for a subject using the Biometric Data List output parameter. Note that no actual biometric data is returned by this operation (see the ~~RetrieveBiometricInformation~~RetrieveBiometricInformation operation to obtain the biometric data). In the encounter-centric model, an encounter ID MAY be specified to indicate that only the biometric data elements stored for that encounter should be returned. If an encounter ID is not specified and encounter data exists for the subject, the operation returns the list of encounter IDs which contain biometric data using the Encounter List output parameter, and the Biometric Data List output parameter is empty.

An optional parameter MAY be used to indicate a filter on the list of returned data. Such a filter may indicate that only biometric types should be listed (e.g., face, finger, iris, etc.) or that only biometric subtypes for a particular biometric type should be listed (e.g., all fingerprints: left slap, right index, etc.). If a filter is not specified, all biometric type and biometric subtype information are listed (e.g., left index finger, right iris, face frontal, etc.).

Request Message

Field	Type	#	?	Meaning
~~ListBiometricDataRequest~~ListBiometricData			Y	Lists the biometric data elements stored for a subject.
↳ListBiometricDataRequest		1	Y	
↳GenericRequestParameters	~~GenericRequestParameters~~GenericRequestParameters	0..1	N	Common request parameters that can be used to identify the requester.

Copyright © OASIS Open 2009-2011. All Rights Reserved.

Field	Type	#	?	Meaning
↳Application	~~ApplicationIdentifier~~ApplicationIdentifier	0..1	N	Identifies the requesting application.
↳ApplicationUser	~~ApplicationUserIdentifier~~ApplicationUserIdentifier	0..1	N	Identifies the user or instance of the requesting application.
↳BIASOperationName	string	0..1	N	Identifies the BIAS operation that is being requested: “ListBiometricData”.
↳Identity	~~BIASIdentity~~BIASIdentity	1	Y	Identifies the subject or, in the encounter-centric model, a subject and an encounter.
↳SubjectID	~~BIASIDType~~BIASIDType	1	Y	A system unique identifier for a subject.
↳EncounterID	~~BIASIDType~~BIASIDType	0..1	N	The identifier of an encounter associated with the subject.
↳ListFilterType	~~ListFilterType~~ListFilterType	0..1	N	Indicates what biometric information should be returned.
↳BiometricTypeFilter	iso-iec19785-3-7:Multiple-types	1..*	Y	Limits the returned information to a specific type of biometric, as defined by CBEFF.
↳IncludeBiometricSubType	boolean	1	Y	A Boolean flag indicating if biometric subtype information should be returned.

Copyright © OASIS Open 2009-2011. All Rights Reserved.

578 **Response Message**

Field	Type	#	?	Meaning
ListBiometricDataResponse			Y	The response to a ListBiometricData operation, containing a list of biometric data elements stored for a subject. In the encounter-centric model, the biometric data elements for a specific encounter are returned. If an encounter ID is not specified and encounter data exists for the subject, the list of encounter IDs which contain biometric data is returned.
↳ ListBiometricDataResponsePackage		1	Y	
↳ ResponseStatus	~~ResponseStatus~~ResponseStatus	1	Y	Returned status for the operation.
↳ Return	~~ReturnCode~~ReturnCode	1	Y	The return code indicates the return status of the operation.
↳ Message	string	0..1	N	A short message corresponding to the return code.
↳ Identity	~~BIASIdentity~~BIASIdentity	0..1	N	Includes a list of biometric data elements associated with a subject or encounter or a list of encounter ID's associated with a subject and which contain biometric data.
↳ BiometricData	~~BIASBiometricDataType~~BIASBiometricDataType	0..1	C	An Identity's biometric data.

Copyright © OASIS Open 2009-2011. All Rights Reserved.

Field	Type	#	?	Meaning
↳BiometricDataList	~~BiometricDataListType~~BiometricDataListType	0..1	N	A list of biometric data elements.
↳BiometricDataElement	~~BiometricDataElementType~~BiometricDataElementType	1..*	Y	Data structure containing information about a biometric record.
↳BiometricType	iso-iec19785-3-7:~~Multiple-types~~MultipleTypesType	1	Y	The type of biological or behavioral data stored in the biometric record, as defined by CBEFF.
↳BiometricTypeCount	positiveInteger	0..1	N	The number of biometric records having the biometric type recorded in the biometric type field.
↳BiometricSubType	iso-iec19785-3-7:~~Subtype~~SubtypeType	0..1	N	More specifically defines the type of biometric data stored in the biometric record, as defined by CBEFF.
↳BDBFormatOwner	~~iso-iec19785-3-7:Registered-int~~positiveInteger	1	Y	Identifies the standards body, working group, industry consortium, or other CBEFF biometric organization that has defined the format for the biometric data.
↳BDBFormatType	~~iso-iec19785-3-7:Registered-int~~positiveInteger	1	Y	Identifies the specific biometric data format specified by the CBEFF biometric organization recorded in the BDB Format Owner field.

Copyright © OASIS Open 2009-2011. All Rights Reserved.

Field	Type	#	?	Meaning
↳EncounterList	~~EncounterListType~~EncounterListType	0..1	C	A list of encounter ID's associated with a subject and which contain biometric data; non-empty if the service was successful, biometric data exists, the encounter-centric model is being used, and an encounter identifier was not specified.
↳EncounterID	~~BIASIDType~~BIASIDType	1..*	Y	The identifier of an encounter.

4.1.13 PerformFusion

~~PerformFusionRequest~~

~~PerformFusionResponse~~

PerformFusionRequest

PerformFusionResponse

The PerformFusion operation accepts either match score or match decision information and creates a fused match result. ~~The FusionInformationListType, through the FusionInformationType~~The FusionInformationListType, through the FusionInformationType, provides specific elements for match score input and match decision input. The fusion method and processes are left to the implementing system.

Request Message

Field	Type	#	?	Meaning
~~PerformFusionRequest~~PerformFusion			Y	Accepts either match score or match decision information and creates a fused match result.
↳PerformFusionRequest		1	Y	
↳GenericRequestParameters	~~GenericRequestParameters~~ GenericRequestParameters	0..1	N	Common request parameters that can be used to identify the requester.

Copyright © OASIS Open 2009-2011. All Rights Reserved.

Field	Type	#	?	Meaning
↳Application	~~ApplicationIdentifier~~ApplicationIdentifier	0..1	N	Identifies the requesting application.
↳ApplicationUser	~~ApplicationUserIdentifier~~ApplicationUserIdentifier	0..1	N	Identifies the user or instance of the requesting application.
↳BIASOperationName	string	0..1	N	Identifies the BIAS operation that is being requested: “PerformFusion”.
↳FusionInput	~~FusionInformationListType~~FusionInformationListType	1	Y	Score or decision input information to the fusion method.
↳FusionElement	~~FusionInformationType~~FusionInformationType	2..*	Y	A set of fusion information.
↳BiometricType	iso-iec19785-3-7:~~Multiple-types~~MultipleTypesType	1	Y	The type of biological or behavioral data stored in the biometric record, as defined by CBEFF.
↳BiometricSubType	iso-iec19785-3-7:~~Subtype~~SubtypeType	0..1	N	More specifically defines the type of biometric data stored in the biometric record.
↳AlgorithmOwner	string	1	Y	The owner or vendor of the algorithm used to determine the score or decision.
↳AlgorithmType	string	1	Y	The Algorithm Owner’s identifier for the specific algorithm product and version used to determine the score or decision.

Copyright © OASIS Open 2009-2011. All Rights Reserved.

Field	Type	#	?	Meaning
ScoreFusionResult	ScoreFusionResult	0..1	C	The similarity score assigned by the matching algorithm. Either a ScoreFusionScore or a DecisionFusionDecision element MUST be used.
Decision	string	0..1	C	The match decision assigned by the matching algorithm. Either a Score or a Decision element MUST be used.

590 **Response Message**

Field	Type	#	?	Meaning
PerformFusionResponse			Y	The response to the PerformFusion operation.
PerformFusionResponsePackage		1	Y	
ResponseStatus	ResponseStatusResponseStatus	1	Y	Returned status for the operation.
Return	ReturnCodeReturnCode	1	Y	The return code indicates the return status of the operation.
Message	string	0..1	N	A short message corresponding to the return code.
Match	MatchTypeMatchType	1	1	Indicates the result of the fusion method.

Formatted Table

Formatted Table

591 ## 4.1.14 QueryCapabilities

592 QueryCapabilitiesRequest

593 QueryCapabilitiesResponse

594 QueryCapabilitiesRequest

595 QueryCapabilitiesResponse

596 The QueryCapabilities operation returns a list of the capabilities, options, galleries, etc. that are supported
597 by the BIAS implementation. Refer to Annex A in the INCITS BIAS standard for conformance
598 requirements regarding which capability names an implementation must use in the QueryCapabilities
599 operation.

Copyright © OASIS Open 2009-2011. All Rights Reserved.

600 **Request Message**

Field	Type	#	?	Meaning
~~QueryCapabilitiesRequest~~QueryCapabilities			Y	Returns a list of the capabilities, options, galleries, etc. that are supported by the BIAS implementation.
QueryCapabilitiesRequest		1	Y	
GenericRequestParameters	~~GenericRequestParameters~~ GenericRequestParameters	0..1	N	Common request parameters that can be used to identify the requester.
Application	~~ApplicationIdentifier~~ApplicationIdentifier	0..1	N	Identifies the requesting application.
ApplicationUser	~~ApplicationUserIdentifier~~ApplicationUserIdentifier	0..1	N	Identifies the user or instance of the requesting application.
BIASOperationName	string	0..1	N	Identifies the BIAS operation that is being requested: "QueryCapabilities".

601 **Response Message**

Field	Type	#	?	Meaning
QueryCapabilitiesResponse			Y	The response to a QueryCapabilities operation.
QueryCapabilitiesResponsePackage		1	Y	
ResponseStatus	~~ResponseStatus~~ResponseStatus	1	Y	Returned status for the operation.
Return	~~ReturnCode~~ReturnCode	1	Y	The return code indicates the return status of the operation.
Message	string	0..1	N	A short message corresponding to the return code.
CapabilityList	~~CapabilityListType~~ CapabilityListType	1	Y	A list of capabilities supported by the BIAS implementation.
Capability	~~CapabilityType~~CapabilityType	0..*	N	A single capability.

Copyright © OASIS Open 2009-2011. All Rights Reserved.

Field	Type	#	?	Meaning
↳CapabilityName	~~CapabilityName~~CapabilityName	1	Y	The name of the capability.
↳CapabilityID	string	0..1	N	An identifier assigned to the capability by the implementing system.
↳CapabilityDescription	string	0..1	N	A description of the capability.
↳CapabilityValue	string	0..1	N	A value assigned to the capability.
↳CapabilitySupportingValue	string	0..1	N	A secondary value supporting the capability.
↳CapabilityAdditionalInfo	string	0..1	N	Contains additional information for the supported capability.

4.1.15 RetrieveBiographicInformation

~~RetrieveBiographicInformationRequest~~

~~RetrieveBiographicInformationResponse~~

RetrieveBiographicInformationRequest

RetrieveBiographicInformationResponse

The RetrieveBiographicInformation operation retrieves the biographic data associated with a subject ID. In the encounter-centric model, the encounter ID MAY be specified and the ~~operation will~~operationwill return the biographic data associated with that encounter. If the encounter ID is not specified in the encounter-centric model, the operation returns the biographic information associated with the most recent encounter.

Request Message

Field	Type	#	?	Meaning
~~RetrieveBiographicInformationRequest~~ RetrieveBiographicInformation			Y	Retrieves the biographic data associated with a subject ID.
↳ RetrieveBiographicInformation Request		1	Y	
↳GenericRequestParameters	~~GenericRequestParameters~~ GenericRequestParameters	0..1	N	Common request parameters that can be used to identify the requester.

Copyright © OASIS Open 2009-2011. All Rights Reserved.

Field	Type	#	?	Meaning
↳Application	~~ApplicationIdentifier~~ApplicationIdentifier	0..1	N	Identifies the requesting application.
↳ApplicationUser	~~ApplicationUserIdentifier~~ApplicationUserIdentifier	0..1	N	Identifies the user or instance of the requesting application.
↳BIASOperationName	string	0..1	N	Identifies the BIAS operation that is being requested: "RetrieveBiographicInformation".
↳Identity	~~BIASIdentity~~BIASIdentity	1	Y	Identifies the subject or, in the encounter-centric model, a subject and an encounter.
↳SubjectID	~~BIASIDType~~BIASIDType	1	Y	A system unique identifier for a subject.
↳EncounterID	~~BIASIDType~~BIASIDType	0..1	N	The identifier of an encounter associated with the subject.

613 **Response Message**

Field	Type	#	?	Meaning
RetrieveBiographicInformationResponse			Y	The response to a RetrieveBiographicInformation operation.
↳RetrieveBiographicInformationResponsePackage		1	Y	
↳ResponseStatus	~~ResponseStatus~~ResponseStatus	1	Y	Returned status for the operation.
↳Return	~~ReturnCode~~ReturnCode	1	Y	The return code indicates the return status of the operation.
↳Message	string	0..1	N	A short message corresponding to the return code.
↳Identity	~~BIASIdentity~~BIASIdentity	1	Y	Includes the set of biographic data associated with a subject.

Copyright © OASIS Open 2009-2011. All Rights Reserved.

Field	Type	#	?	Meaning
↳BiographicData	~~BiographicDataType~~BiographicDataType	1	Y	An Identity's biographic data. One of the following elements MUST be present.
↳LastName	string	0..1	C	The last name of a subject.
↳FirstName	string	0..1	C	The first name of a subject.
↳BiographicDataItem	~~BiographicDataItemType~~ BiographicDataItemType	0..*	C	A single biographic data element.
↳BiographicDataSet	~~BiographicDataSetType~~ BiographicDataItemType	0..1	C	A set of biographic data information.

4.1.16 RetrieveBiometricInformation

~~RetrieveBiometricInformationRequest~~

~~RetrieveBiometricInformationResponse~~

RetrieveBiometricInformationRequest

RetrieveBiometricInformationResponse

The RetrieveBiometricInformation operation retrieves the biometric data associated with a subject ID. In the encounter-centric model, the encounter ID MAY be specified and the ~~operation will~~operationwill return the biometric data associated with that encounter. If the encounter ID is not specified in the encounter-centric model, the operation returns the biometric information associated with the most recent encounter. The operation provides an OPTIONAL input parameter to specify that only biometric data of a certain type should be retrieved.

Request Message

Field	Type	#	?	Meaning
~~RetrieveBiometricInformationRequest~~ RetrieveBiometricInformation			Y	Retrieves the biometric data associated with a subject ID.
↳RetrieveBiometricInformationRequest		1	Y	
↳GenericRequestParameters	~~GenericRequestParameters~~ GenericRequestParameters	0..1	N	Common request parameters that can be used to identify the requester.
↳Application	~~ApplicationIdentifier~~ApplicationIdentifier	0..1	N	Identifies the requesting application.
↳ApplicationUser	~~ApplicationUserIdentifier~~ApplicationUserIdentifier	0..1	N	Identifies the user or instance of the requesting application.

Copyright © OASIS Open 2009-2011. All Rights Reserved.

Field	Type	#	?	Meaning
↳BIASOperationName	string	0..1	N	Identifies the BIAS operation that is being requested: “RetrieveBiometricInformation”.
↳Identity	~~BIASIdentity~~BIASIdentity	1	Y	Identifies the subject or, in the encounter-centric model, a subject and an encounter.
↳SubjectID	~~BIASIDType~~BIASIDType	1	Y	A system unique identifier for a subject.
↳EncounterID	~~BIASIDType~~BIASIDType	0..1	N	The identifier of an encounter associated with the subject.
↳BiometricType	iso-iec19785-3-7:Multiple-types	0..1	N	The type of biological or behavioral data to retrieve.

626 ## Response Message

Field	Type	#	?	Meaning
RetrieveBiometricInformationResponse			Y	The response to a RetrieveBiometricInformation operation.
↳RetrieveBiometricInformationResponsePackage		1	Y	
↳ResponseStatus	~~ResponseStatus~~ResponseStatus	1	Y	Returned status for the operation.
↳Return	~~ReturnCode~~ReturnCode	1	Y	The return code indicates the return status of the operation.
↳Message	string	0..1	N	A short message corresponding to the return code.
↳Identity	~~BIASIdentity~~BIASIdentity	1	Y	Includes the biometric data associated with a subject.
↳BiometricData	~~BIASBiometricDataType~~ BIASBiometricDataType	1	Y	An Identity’s biometric data.
↳BIRList	~~CBEFF_BIR_ListType~~CBEFF_BIR_ListType	1	Y	A list of CBEFF-BIR elements.
↳BIR	~~CBEFF_BIR_Type~~CBEFF_BIR_Type	0..*	N	CBEFF structure containing information about a biometric sample.

Copyright © OASIS Open 2009-2011. All Rights Reserved.

4.1.17 SetBiographicData

~~SetBiographicDataRequest~~

~~SetBiographicDataResponse~~

SetBiographicDataRequest

SetBiometricDataResponse

The SetBiographicData operation associates biographic data to a given subject record. The identity model of the system determines whether the biographic information should replace any existing biographic information (person-centric model) or if a new encounter should be created and associated with the subject (encounter-centric model). For encounter-centric models, the encounter ID MAY be specified by the caller in order to link biographic and biometric information (assuming biometric information was previously associated using the ~~SetBiometricData~~SetBiometricData operation). If the encounter ID is omitted for the encounter-centric model, the operation returns a system-assigned encounter ID.

Request Message

Field	Type	#	?	Meaning
~~SetBiographicDataRequest~~SetBiographicData			Y	Associates biographic data to a given subject record.
SetBiographicDataRequest		1	Y	
GenericRequestParameters	~~GenericRequestParameters~~GenericRequestParameters	0..1	N	Common request parameters that can be used to identify the requester.
Application	~~ApplicationIdentifier~~ApplicationIdentifier	0..1	N	Identifies the requesting application.
ApplicationUser	~~ApplicationUserIdentifier~~ApplicationUserIdentifier	0..1	N	Identifies the user or instance of the requesting application.
BIASOperationName	string	0..1	N	Identifies the BIAS operation that is being requested: “SetBiographicData”.
Identity	~~BIASIdentity~~BIASIdentity	1	Y	Identifies the subject or, in the encounter-centric model, a subject and an encounter, and includes the biographic data to store.

Copyright © OASIS Open 2009-2011. All Rights Reserved.

Field	Type	#	?	Meaning
SubjectID	~~BIASIDType~~BIASIDType	1	Y	A system unique identifier for a subject.
EncounterID	~~BIASIDType~~BIASIDType	0..1	N	The identifier of an encounter associated with the subject.
BiographicData	~~BiographicDataType~~BiographicDataType	1	Y	An Identity's biographic data. One of the following elements MUST be present.
LastName	string	0..1	C	The last name of a subject.
FirstName	string	0..1	C	The first name of a subject.
BiographicDataItem	~~BiographicDataItemType~~BiographicDataItemType	0..*	C	A single biographic data element.
BiographicDataSet	~~BiographicDataSetType~~BiographicDataSetType	0..1	C	A set of biographic data information.

641 **Response Message**

Field	Type	#	?	Meaning
SetBiographicDataResponse			Y	The response to a SetBiographicData operation.
SetBiographicDataResponsePackage		1	Y	
ResponseStatus	~~ResponseStatus~~ResponseStatus	1	Y	Returned status for the operation.
Return	~~ReturnCode~~ReturnCode	1	Y	The return code indicates the return status of the operation.
Message	string	0..1	N	A short message corresponding to the return code.

Formatted Table

Formatted Table

Copyright © OASIS Open 2009-2011. All Rights Reserved.

Field	Type	#	?	Meaning
Identity	~~BIASIdentity~~BIASIdentity	0..1	C	In an encounter-centric model, identifies the encounter ID assigned to a new encounter.
EncounterID	~~BIASIDType~~BIASIDType	1	Y	The identifier of an encounter associated with the subject.

Formatted Table

642 ## 4.1.18 SetBiometricData

643 ~~SetBiometricDataRequest~~

644 ~~SetBiometricDataResponse~~

645 SetBiometricDataRequest

646 SetBiometricDataResponse

647 The SetBiometricData operation associates biometric data to a given subject record. The identity model
648 of the system determines whether the biometric information should replace any existing biometric
649 information (person-centric model) or if a new encounter should be created and associated with the
650 subject (encounter-centric model). For encounter-centric models, the encounter ID MAY be specified by
651 the caller in order to link biographic and biometric information (assuming biographic information was
652 previously associated using the ~~SetBiographicData~~SetBiographicData operation). If the encounter ID is
653 omitted for the encounter-centric model, the operation returns a system-assigned encounter ID.

654 ### Request Message

Field	Type	#	?	Meaning
~~SetBiometricDataRequest~~SetBiometricData			Y	Associates biometric data to a given subject record.
SetBiometricDataRequest		1	Y	
GenericRequestParameters	~~GenericRequestParameters~~ GenericRequestParameters	0..1	N	Common request parameters that can be used to identify the requester.
Application	~~ApplicationIdentifier~~ApplicationIdentifier	0..1	N	Identifies the requesting application.
ApplicationUser	~~ApplicationUserIdentifier~~ApplicationUserIdentifier	0..1	N	Identifies the user or instance of the requesting application.
BIASOperationName	string	0..1	N	Identifies the BIAS operation that is being requested: “SetBiometricData”.

Copyright © OASIS Open 2009-2011. All Rights Reserved.

Field	Type	#	?	Meaning
Identity	~~BIASIdentity~~BIASIdentity	1	Y	Identifies the subject or, in the encounter-centric model, a subject and an encounter, and includes the biometric data to store.
SubjectID	~~BIASIDType~~BIASIDType	1	Y	A system unique identifier for a subject.
EncounterID	~~BIASIDType~~BIASIDType	0..1	N	The identifier of an encounter associated with the subject.
BiometricData	~~BIASBiometricDataType~~BIASBiometricDataType	1	Y	An Identity's biometric data.
BIRList	~~CBEFF_BIR_ListType~~CBEFF_BIR_ListType	1	Y	A list of CBEFF-BIR elements.
BIR	~~CBEFF_BIR_Type~~CBEFF_BIR_Type	1..*	Y	CBEFF structure containing information about a biometric sample.

Response Message

Field	Type	#	?	Meaning
SetBiometricDataResponse			Y	The response to a SetBiometricData operation.
SetBiometricDataResponsePackage		1	Y	
ResponseStatus	~~ResponseStatus~~ResponseStatus	1	Y	Returned status for the operation.
Return	~~ReturnCode~~ReturnCode	1	Y	The return code indicates the return status of the operation.
Message	string	0..1	N	A short message corresponding to the return code.
Identity	~~BIASIdentity~~BIASIdentity	0..1	C	In an encounter-centric model, identifies the encounter ID assigned to a new encounter.

Formatted Table

Formatted Table

Copyright © OASIS Open 2009-2011. All Rights Reserved.

Field	Type	#	?	Meaning
EncounterID	~~BIASIDType~~BIASIDType	1	Y	The identifier of an encounter associated with the subject.

Formatted Table

4.1.19 TransformBiometricData

~~TransformBiometricDataRequest~~

~~TransformBiometricDataResponse~~

TransformBiometricDataRequest

TransformBiometricDataResponse

The TransformBiometricData operation transforms or processes a given biometric in one format into a new target format.

Request Message

Field	Type	#	?	Meaning
~~TransformBiometricDataRequest~~TransformBiometricData			Y	Transforms or processes a given biometric in one format into a new target format.
TransformBiometricDataRequest		1	Y	
GenericRequestParameters	~~GenericRequestParameters~~ GenericRequestParameters	0..1	N	Common request parameters that can be used to identify the requester.
Application	~~ApplicationIdentifier~~ApplicationIdentifier	0..1	N	Identifies the requesting application.
ApplicationUser	~~ApplicationUserIdentifier~~ApplicationUserIdentifier	0..1	N	Identifies the user or instance of the requesting application.
BIASOperationName	string	0..1	N	Identifies the BIAS operation that is being requested: “TransformBiometricData”.
InputBIR	~~CBEFF_BIR_Type~~CBEFF_BIR_Type	1	Y	Data structure containing the biometric information to be transformed.
TransformOperation	unsignedLong	1	Y	Value indicating the type of transformation to perform.

Copyright © OASIS Open 2009-2011. All Rights Reserved.

Field	Type	#	?	Meaning
↳TransformControl	string	0..1	N	Specifies controls for the requested transform operation. Note: This could be a compression ratio, target data format, etc.

NOTE: The values for TransformOperation and TransformControl are implementation specific.

Response Message

Field	Type	#	?	Meaning
TransformBiometricDataResponse			Y	The response to a TransformBiometric Data operation.
↳TransformBiometricDataResponsePackage		1	Y	
↳ResponseStatus	~~ResponseStatus~~ResponseStatus	1	Y	Returned status for the operation.
↳Return	~~ReturnCode~~ReturnCode	1	Y	The return code indicates the return status of the operation.
↳Message	string	0..1	N	A short message corresponding to the return code.
↳OutputBIR	~~CBEFF_BIR_Type~~CBEFF_BIR_Type	0..1	N	Data structure containing the new, transformed biometric information.

Formatted Table

Formatted Table

4.1.20 UpdateBiographicData

~~UpdateBiographicDataRequest~~

~~UpdateBiographicDataResponse~~

UpdateBiographicDataRequest

UpdateBiographicDataResponse

The UpdateBiographicData operation updates the biographic data for an existing subject record. The operation replaces any existing biographic data with the new biographic data. In the encounter-centric model, the encounter ID MUST be specified.

Copyright © OASIS Open 2009-2011. All Rights Reserved.

674 **Request Message**

Field	Type	#	?	Meaning
~~UpdateBiographicDataRequest~~UpdateBiographicData			Y	Updates the biographic data for a given subject record.
UpdateBiographicDataRequest		1	Y	
GenericRequestParameters	~~GenericRequestParameters~~ GenericRequestParameters	0..1	N	Common request parameters that can be used to identify the requester.
Application	~~ApplicationIdentifier~~ApplicationIdentifier	0..1	N	Identifies the requesting application.
ApplicationUser	~~ApplicationUserIdentifier~~ApplicationUserIdentifier	0..1	N	Identifies the user or instance of the requesting application.
BIASOperationName	string	0..1	N	Identifies the BIAS operation that is being requested: “UpdateBiographicData”.
Identity	~~BIASIdentity~~BIASIdentity	1	Y	Identifies the subject or, in the encounter-centric model, a subject and an encounter, and includes the biographic data to update.
SubjectID	~~BIASIDType~~BIASIDType	1	Y	A system unique identifier for a subject.
EncounterID	~~BIASIDType~~BIASIDType	0..1	C	The identifier of an encounter associated with the subject. Required for encounter-centric models.
BiographicData	~~BiographicDataType~~BiographicDataType	1	Y	An Identity’s biographic data. One of the following elements MUST be present.

Copyright © OASIS Open 2009-2011. All Rights Reserved.

Field	Type	#	?	Meaning
↳LastName	string	0..1	C	The last name of a subject.
↳FirstName	string	0..1	C	The first name of a subject.
↳BiographicDataItem	~~BiographicDataItemType~~BiographicDataItemType	0..*	C	A single biographic data element.
↳BiographicDataSet	~~BiographicDataSetType~~BiographicDataSetType	0..1	C	A set of biographic data information.

675 ### Response Message

Field	Type	#	?	Meaning
UpdateBiographicDataResponse			Y	The response to an UpdateBiographicData operation.
↳UpdateBiographicDataResponsePackage		1	Y	
↳ResponseStatus	~~ResponseStatus~~ResponseStatus	1	Y	Returned status for the operation.
↳Return	~~ReturnCode~~ReturnCode	1	Y	The return code indicates the return status of the operation.
↳Message	string	0..1	N	A short message corresponding to the return code.

Formatted Table

Formatted Table

676 ## 4.1.21 UpdateBiometricData

677 ~~UpdateBiometricDataRequest~~

678 ~~UpdateBiometricDataResponse~~

679 UpdateBiometricDataRequest

680 UpdateBiometricDataResponse

681 The UpdateBiometricData operation updates the biometric data for an existing subject record. The
682 operation includes an OPTIONAL parameter indicating if the new biometric sample should be merged
683 with the existing biometric sample. If this parameter is set to “False” or is not used in the request, the
684 operation replaces the existing biometric sample with the new biometric sample. In the encounter-centric
685 model, the encounter ID MUST be specified.

Copyright © OASIS Open 2009-2011. All Rights Reserved.

686 **Request Message**

Field	Type	#	?	Meaning
~~UpdateBiometricDataRequest~~UpdateBiometricData			Y	Updates a single biometric sample for a given subject record.
UpdateBiometricDataRequest		1	Y	
GenericRequestParameters	~~GenericRequestParameters~~GenericRequestParameters	0..1	N	Common request parameters that can be used to identify the requester.
Application	~~ApplicationIdentifier~~ApplicationIdentifier	0..1	N	Identifies the requesting application.
ApplicationUser	~~ApplicationUserIdentifier~~ApplicationUserIdentifier	0..1	N	Identifies the user or instance of the requesting application.
BIASOperationName	string	0..1	N	Identifies the BIAS operation that is being requested: “UpdateBiometricData”.
Identity	~~BIASIdentity~~BIASIdentity	1	Y	Identifies the subject or, in the encounter-centric model, a subject and an encounter, and includes the biometric data to update.
SubjectID	~~BIASIDType~~BIASIDType	1	Y	A system unique identifier for a subject.
EncounterID	~~BIASIDType~~BIASIDType	0..1	C	The identifier of an encounter associated with the subject. Required for encounter-centric models.
BiometricData	~~BIASBiometricDataType~~BIASBiometricDataType	1	Y	An Identity’s biometric data.
BIR	~~CBEFF_BIR_Type~~CBEFF_BIR_Type	1	Y	Contains biometric information in either a non-XML or an XML representation.
Merge	boolean	0..1	N	Value indicating if the input biometric sample should be merged with any existing biometric information.

Copyright © OASIS Open 2009-2011. All Rights Reserved.

687 ### Response Message

Field	Type	#	?	Meaning
UpdateBiometricDataResponse			Y	The response to an UpdateBiometricData operation.
↳ UpdateBiometricDataResponsePackage		1	Y	
↳ ResponseStatus	~~ResponseStatus~~ResponseStatus	1	Y	Returned status for the operation.
↳ Return	~~ReturnCode~~ReturnCode	1	Y	The return code indicates the return status of the operation.
↳ Message	string	0..1	N	A short message corresponding to the return code.

Formatted Table

Formatted Table

688 ## 4.1.22 VerifySubject

689 ~~VerifySubjectRequest~~

690 ~~VerifySubjectResponse~~

691 VerifySubjectRequest

692 VerifySubjectResponse

693 The VerifySubject operation performs a 1:1 verification match between a given biometric and either a
694 claim to identity in a given gallery or another given biometric. As such either the Identity Claim or
695 Reference BIR input parameters are REQUIRED.

696 ### Request Message

Field	Type	#	?	Meaning
~~VerifySubjectRequest~~VerifySubject			Y	Performs a 1:1 verification match between a given biometric and either a claim to identity in a given gallery or another given biometric.
↳ VerifySubjectRequest		1	Y	
↳ GenericRequestParameters	~~GenericRequestParameters~~ GenericRequestParameters	0..1	N	Common request parameters that can be used to identify the requester.
↳ Application	~~ApplicationIdentifier~~ApplicationIdentifier	0..1	N	Identifies the requesting application.

Copyright © OASIS Open 2009-2011. All Rights Reserved.

Field	Type	#	?	Meaning
ApplicationUser	~~ApplicationUserIdentifier~~ApplicationUserIdentifier	0..1	N	Identifies the user or instance of the requesting application.
BIASOperationName	string	0..1	N	Identifies the BIAS operation that is being requested: "VerifySubject".
GalleryID	~~BIASIDType~~BIASIDType	0..1	C	The identifier of the gallery or population group of which the subject must be a member. Required if an Identity Claim is provided.
Identity	~~BIASIdentity~~BIASIdentity	1	Y	Includes the identifying information and/or input and reference biometric samples.
IdentityClaim	~~BIASIDType~~BIASIDType	0..1	C	An identifier by which a subject is known to a particular gallery or population group. Required if a Reference BIR is not provided.
BiometricData	~~BIASBiometricDataType~~BIASBiometricDataType	1	Y	An Identity's biometric data.
InputBIR	~~CBEFF_BIR_Type~~CBEFF_BIR_Type	1	Y	Maps to specific INCITS BIAS elements as required by that specification.
ReferenceBIR	~~CBEFF_BIR_Type~~CBEFF_BIR_Type	0..1	C	Maps to specific INCITS BIAS elements as required by that specification. Required if an Identity Claim is not provided.

697 ## Response Message

Field	Type	#	?	Meaning
VerifySubjectResponse			Y	The response to a VerifySubject operation.
VerifySubjectResponsePackage		1	Y	
ResponseStatus	~~ResponseStatus~~ResponseStatus	1	Y	Returned status for the operation.

Formatted Table

Formatted Table

Copyright © OASIS Open 2009-2011. All Rights Reserved.

Field	Type	#	?	Meaning
↳Return	~~ReturnCode~~ReturnCode	1	Y	The return code indicates the return status of the operation.
↳Message	string	0..1	N	A short message corresponding to the return code.
↳Match	boolean	0..1	N	Indicates if the Input BIR matched either the biometric information associated with the Identity Claim or the Reference BIR.
↳Score	~~Score~~Score	0..1	N	The score if the biometric information matched.

Formatted Table

4.2 Aggregate Operations

4.2.1 Enroll

~~EnrollRequest~~

~~EnrollResponse~~

EnrollRequest

EnrollResponse

The Enroll operation adds a new subject or, in an encounter-centric model, a new encounter to the system. This may be accomplished in a number of different ways according to system requirements and/or resources. If the Enroll operation is implemented as a synchronous service, the implementing system immediately processes the request and returns the results in the Return Data parameter. If the Enroll operation is implemented as an asynchronous service, the implementing system returns a token in the Return Data parameter, which is an indication that the request is being handled asynchronously. In this case, the ~~GetEnrollResults operation is~~GetEnrollResults operationis used to poll for the results of the Enroll request.

Request Message

Field	Type	#	?	Meaning
~~EnrollRequest~~Enroll			Y	Adds a new subject or, in an encounter-centric model, a new encounter to the system.
↳EnrollRequest		1	Y	

Copyright © OASIS Open 2009-2011. All Rights Reserved.

Field	Type	#	?	Meaning
GenericRequestParameters	~~GenericRequestParameters~~ GenericRequestParameters	0..1	N	Common request parameters that can be used to identify the requester.
Application	~~ApplicationIdentifier~~ApplicationIdentifier	0..1	N	Identifies the requesting application.
ApplicationUser	~~ApplicationUserIdentifier~~ApplicationUserIdentifier	0..1	N	Identifies the user or instance of the requesting application.
BIASOperationName	string	0..1	N	Identifies the BIAS operation that is being requested: “Enroll”.
ProcessingOptions	~~ProcessingOptionsType~~ProcessingOptionsType	1	Y	Options that guide how the aggregate service request is processed.
Option	string	0..*	N	An option supported by the implementing system.
InputData	~~InformationType~~InformationType	1	Y	Contains the input data for the operation, as required by the implementing system.

Response Message

Field	Type	#	?	Meaning
EnrollResponse			Y	The response to an Enroll operation.
EnrollResponsePackage		1	Y	
ResponseStatus	~~ResponseStatus~~ResponseStatus	1	Y	Returned status for the operation.
Return	~~ReturnCode~~ReturnCode	1	Y	The return code indicates the return status of the operation.
Message	string	0..1	N	A short message corresponding to the return code.
ReturnData	~~InformationType~~InformationType	0..1	N	Contains the output data for the response.

Formatted Table

Formatted Table

4.2.2 GetEnrollResults

~~GetEnrollResultsRequest~~

~~GetEnrollResultsResponse~~

GetEnrollResultsRequest

Copyright © OASIS Open 2009-2011. All Rights Reserved.

718 GetEnrollResultsResponse

719 The GetEnrollResults operation retrieves the enrollment results for the specified token. This operation is
720 used in conjunction with the ~~Enroll~~Enroll operation. If the Enroll operation is implemented as an
721 asynchronous service, the implementing system returns a token and the GetEnrollResults operation is
722 used to poll for the results of the original Enroll request.

723 If the service provider implements an asynchronous Enroll operation, then it MUST also implement the
724 GetEnrollResults operation.

725 ## Request Message

Field	Type	#	?	Meaning
~~GetEnrollResultsRequest~~GetEnrollResults			Y	Retrieves the enrollment results for the specified token.
GetEnrollResultsRequest		1	Y	
GenericRequestParameters	~~GenericRequestParameters~~ GenericRequestParameters	0..1	N	Common request parameters that can be used to identify the requester.
Application	~~ApplicationIdentifier~~ApplicationIdentifier	0..1	N	Identifies the requesting application.
ApplicationUser	~~ApplicationUserIdentifier~~ApplicationUserIdentifier	0..1	N	Identifies the user or instance of the requesting application.
BIASOperationName	string	0..1	N	Identifies the BIAS operation that is being requested: “GetEnrollResults”.
Token	~~TokenType~~TokenType	1	Y	A value used to retrieve the results of the Enroll request.
TokenValue	string	1	Y	A value returned by the implementing system that is used to retrieve the results to an operation at a later time.
Expiration	date	1	Y	A date and time at which point the token expires and the operation results are no longer guaranteed to be available.

Copyright © OASIS Open 2009-2011. All Rights Reserved.

Response Message

Field	Type	#	?	Meaning
GetEnrollResultsResponse			Y	The response to a GetEnrollResults operation.
GetEnrollResultsResponsePackage		1	Y	
ResponseStatus	~~ResponseStatus~~ResponseStatus	1	Y	Returned status for the operation.
Return	~~ReturnCode~~ReturnCode	1	Y	The return code indicates the return status of the operation.
Message	string	0..1	N	A short message corresponding to the return code.
ReturnData	~~InformationType~~InformationType	0..1	N	Contains the output data for the response.

Formatted Table

Formatted Table

4.2.3 GetIdentifyResults

~~GetIdentifyResultsRequest~~

~~GetIdentifyResultsResponse~~

GetIdentifyResultsRequest

GetIdentifyResultsResponse

The GetIdentifyResults operation retrieves the identification results for the specified token. This operation is used in conjunction with the ~~Identify~~Identify operation. If the Identify operation is implemented as an asynchronous service, the implementing system returns a token and the GetIdentifyResults operation is used to poll for the results of the original Identify request.

If the service provider implements an asynchronous Identify operation, then it MUST also implement the GetIdentifyResults operation.

Request Message

Field	Type	#	?	Meaning
~~GetIdentifyResultsRequest~~GetIdentifyResults			Y	Retrieves the identification results for the specified token
GetIdentifyResultsRequest		1	Y	
GenericRequestParameters	~~GenericRequestParameters~~ GenericRequestParameters	0..1	N	Common request parameters that can be used to identify the requester.

Copyright © OASIS Open 2009-2011. All Rights Reserved.

Field	Type	#	?	Meaning
Application	~~ApplicationIdentifier~~ApplicationIdentifier	0..1	N	Identifies the requesting application.
ApplicationUser	~~ApplicationUserIdentifier~~ApplicationUserIdentifier	0..1	N	Identifies the user or instance of the requesting application.
BIASOperationName	string	0..1	N	Identifies the BIAS operation that is being requested: "GetIdentifyResults".
Token	~~TokenType~~TokenType	1	Y	A value used to retrieve the results of the Identify request.
TokenValue	string	1	Y	A value returned by the implementing system that is used to retrieve the results to an operation at a later time.
Expiration	date	1	Y	A date and time at which point the token expires and the operation results are no longer guaranteed to be available.

740 **Response Message**

Field	Type	#	?	Meaning
GetIdentifyResultsResponse			Y	The response to a GetIdentifyResults operation.
GetIdentifyResultsResponsePackage		1	Y	
ResponseStatus	~~ResponseStatus~~ResponseStatus	1	Y	Returned status for the operation.
Return	~~ReturnCode~~ReturnCode	1	Y	The return code indicates the return status of the operation.
Message	string	0..1	N	A short message corresponding to the return code.
ReturnData	~~InformationType~~InformationType	0..1	N	Contains the output data for the response.

Formatted Table

Formatted Table

Copyright © OASIS Open 2009-2011. All Rights Reserved.

4.2.4 GetVerifyResults

~~GetVerifyResultsRequest~~

~~GetVerifyResultsResponse~~

GetVerifyResultsRequest

GetVerifyResultsResponse

The GetVerifyResults operation retrieves the verification results for the specified token. This operation is used in conjunction with the ~~Verify~~Verify operation. If the Verify operation is implemented as an asynchronous service, the implementing system returns a token and the GetVerifyResults operation is used to poll for the results of the original Verify request.

If the service provider implements an asynchronous ~~Verify operation~~Verifyoperation, then it MUST also implement the GetVerifyResults operation.

Request Message

Field	Type	#	?	Meaning
~~GetVerifyResultsRequest~~GetVerifyResults			Y	Retrieves the verification results for the specified token
GetVerifyResultsRequest		1	Y	
GenericRequestParameters	~~GenericRequestParameters~~ GenericRequestParameters	0..1	N	Common request parameters that can be used to identify the requester.
Application	~~ApplicationIdentifier~~ApplicationIdentifier	0..1	N	Identifies the requesting application.
ApplicationUser	~~ApplicationUserIdentifier~~ApplicationUserIdentifier	0..1	N	Identifies the user or instance of the requesting application.
BIASOperationName	string	0..1	N	Identifies the BIAS operation that is being requested: “GetVerifyResults”.
Token	~~TokenType~~TokenType	1	Y	A value used to retrieve the results of the Verify request.
TokenValue	string	1	Y	A value returned by the implementing system that is used to retrieve the results to an operation at a later time.
Expiration	date	1	Y	A date and time at which point the token expires and the operation results are no longer guaranteed

Copyright © OASIS Open 2009-2011. All Rights Reserved.

Field	Type	#	?	Meaning
				to be available.

Response Message

Field	Type	#	?	Meaning
GetVerifyResultsResponse			Y	The response to a GetVerifyResults operation.
GetVerifyResultsResponsePackage		1	Y	
ResponseStatus	~~ResponseStatus~~ResponseStatus	1	Y	Returned status for the operation.
Return	~~ReturnCode~~ReturnCode	1	Y	The return code indicates the return status of the operation.
Message	string	0..1	N	A short message corresponding to the return code.
ReturnData	~~InformationType~~InformationType	0..1	N	Contains the output data for the response.
Match	boolean	0..1	N	Indicates if the Input BIR matched either the biometric information associated with the Identity Claim or the Reference BIR.
Score	~~Score~~Score	0..1	N	The score if the biometric information matched.

Formatted Table

Formatted Table

4.2.5 Identify

~~IdentifyRequest~~

~~IdentifyResponse~~

IdentifyRequest

IdentifyResponse

The Identify operation performs an identification function according to system requirements and/or resources. If the Identify operation is implemented as a synchronous service, the implementing system immediately processes the request and returns the results in the Return Data parameter. If the Identify operation is implemented as an asynchronous service, the implementing system returns a token in the Return Data parameter, which is an indication that the request is being handled asynchronously. In this

Copyright © OASIS Open 2009-2011. All Rights Reserved.

764 case, the ~~GetIdentifyResults~~GetIdentifyResults operation is used to poll for the results of the Identify
765 request.

Formatted: Font: 10 pt

766 ## Request Message

Field	Type	#	?	Meaning
~~IdentifyRequest~~Identify			Y	Performs an identification function.
IdentifyRequest		1	Y	
↳GenericRequestParameters	~~GenericRequestParameters~~ GenericRequestParameters	0..1	N	Common request parameters that can be used to identify the requester.
↳Application	~~ApplicationIdentifier~~ApplicationIdentifier	0..1	N	Identifies the requesting application.
↳ApplicationUser	~~ApplicationUserIdentifier~~ApplicationUserIdentifier	0..1	N	Identifies the user or instance of the requesting application.
↳BIASOperationName	string	0..1	N	Identifies the BIAS operation that is being requested: “Identify”.
↳ProcessingOptions	~~ProcessingOptionsType~~ProcessingOptionsType	1	Y	Options that guide how the aggregate service request is processed.
↳Option	string	0..*	N	An option supported by the implementing system.
↳InputData	~~InformationType~~InformationType	1	Y	Contains the input data for the aggregate services.

767 ## Response Message

Field	Type	#	?	Meaning
IdentifyResponse			Y	The response to an Identify operation.
↳IdentifyResponsePackage		1	Y	
↳ResponseStatus	~~ResponseStatus~~ResponseStatus	1	Y	Returned status for the operation.
↳Return	~~ReturnCode~~ReturnCode	1	Y	The return code indicates the return status of the operation.
↳Message	string	0..1	N	A short message corresponding to the return code.

Formatted Table

Formatted Table

Copyright © OASIS Open 2009-2011. All Rights Reserved.

Field	Type	#	?	Meaning
ReturnData	~~InformationType~~InformationType	0..1	N	Contains the output data for the response.

Formatted Table

4.2.6 RetrieveInformation

~~RetrieveInformationRequest~~

~~RetrieveInformationResponse~~

RetrieveInformationRequest

RetrieveInformationResponse

The RetrieveInformation operation retrieves requested information about a subject, or in an encounter-centric model about an encounter. In a person-centric model, this operation can be used to retrieve both biographic and biometric information for a subject record. In an encounter-centric model, this operation can be used to retrieve biographic and/or biometric information for either a single encounter or all encounters. Either a subject ID or encounter ID MUST be specified.

Request Message

Field	Type	#	?	Meaning
~~RetrieveInformationRequest~~RetrieveInformation			Y	Retrieves requested information about a subject or encounter.
RetrieveInformationRequest		1	Y	
GenericRequestParameters	~~GenericRequestParameters~~ GenericRequestParameters	0..1	N	Common request parameters that can be used to identify the requester.
Application	~~ApplicationIdentifier~~ApplicationIdentifier	0..1	N	Identifies the requesting application.
ApplicationUser	~~ApplicationUserIdentifier~~ApplicationUserIdentifier	0..1	N	Identifies the user or instance of the requesting application.
BIASOperationName	string	0..1	N	Identifies the BIAS operation that is being requested: “RetrieveInformation”.
ProcessingOptions	~~ProcessingOptionsType~~ProcessingOptionsType	1	Y	Options that guide how the aggregate service request is processed, and MAY identify what type(s) of information should be returned.
Option	string	0..*	N	An option supported by the implementing system.

Copyright © OASIS Open 2009-2011. All Rights Reserved.

Field	Type	#	?	Meaning
Identity	~~BIASIdentity~~BIASIdentity	1	Y	Includes the identifier of the subject or encounter.
SubjectID	~~BIASIDType~~BIASIDType	0..1	C	A system unique identifier for a subject. Required if an Encounter ID is not provided.
EncounterID	~~BIASIDType~~BIASIDType	0..1	C	The identifier of an encounter associated with the subject. Required if a Subject ID is not provided.

779 **Response Message**

Field	Type	#	?	Meaning
RetrieveInformationResponse			Y	Response to a RetrieveInformation operation.
RetrieveInformationResponsePackage		1	Y	
ResponseStatus	~~ResponseStatus~~ResponseStatus	1	Y	Returned status for the operation.
Return	~~ReturnCode~~ReturnCode	1	Y	The return code indicates the return status of the operation.
Message	string	0..1	N	A short message corresponding to the return code.
ReturnData	~~InformationType~~InformationType	0..1	N	Contains the output data for the response.

Formatted Table

Formatted Table

780 ## 4.2.7 Verify

781 ~~VerifyRequest~~

782 ~~VerifyResponse~~

783 VerifyRequest

784 VerifyResponse

785 The Verify operation performs a 1:1 verification function according to system requirements and/or
786 resources. Either the Identity Claim or Reference BIR input parameters are REQUIRED. If the Verify
787 operation is implemented as a synchronous service, the implementing system immediately processes the
788 request and returns the results in the Return Data parameter. If the Verify operation is implemented as an

Copyright © OASIS Open 2009-2011. All Rights Reserved.

asynchronous service, the implementing system returns a token in the Return Data parameter, which is an indication that the request is being handled asynchronously. In this case, the ~~GetVerifyResults~~GetVerifyResults operation is used to poll for the results of the Verify request.

Formatted: Font: 10 pt

Request Message

Field	Type	#	?	Meaning
~~VerifyRequest~~Verify			Y	Performs a 1:1 verification function.
VerifyRequest		1	Y	
GenericRequestParameters	~~GenericRequestParameters~~ GenericRequestParameters	0..1	N	Common request parameters that can be used to identify the requester.
Application	~~ApplicationIdentifier~~ApplicationIdentifier	0..1	N	Identifies the requesting application.
ApplicationUser	~~ApplicationUserIdentifier~~ApplicationUserIdentifier	0..1	N	Identifies the user or instance of the requesting application.
BIASOperationName	string	0..1	N	Identifies the BIAS operation that is being requested: “Verify”.
ProcessingOptions	~~ProcessingOptionsType~~ProcessingOptionsType	1	Y	Options that guide how the aggregate service request is processed.
Option	string	0..*	N	An option supported by the implementing system.
InputData	~~InformationType~~InformationType	1	Y	Contains the input data for the aggregate services.
Identity	~~BIASIdentity~~BIASIdentity	1	Y	Includes either the Identity Claim or Reference BIR.
IdentityClaim	~~BIASIDType~~BIASIDType	0..1	C	An identifier by which a subject is known to a particular gallery or population group. Required if a Reference BIR is not provided.
BiometricData	~~BIASBiometricDataType~~BIASBiometricDataType	0..1	N	An Identity’s biometric data.

Copyright © OASIS Open 2009-2011. All Rights Reserved.

Field	Type	#	?	Meaning
ReferenceBIR	~~CBEFF_BIR_Type~~CBEFF_BIR_Type	0..1	C	Maps to specific INCITS BIAS elements as required by that specification. Required if an Identity Claim is not provided.
GalleryID	~~BIASIDType~~BIASIDType	0..1	C	The identifier of the gallery or population group of which the subject must be a member. Required if an Identity Claim is provided.

Response Message

Field	Type	#	?	Meaning
VerifyResponse			Y	The response to a Verify operation.
VerifyResponsePackage		1	Y	
ResponseStatus	~~ResponseStatus~~ResponseStatus	1	Y	Returned status for the operation.
Return	~~ReturnCode~~ReturnCode	1	Y	The return code indicates the return status of the operation.
Message	string	0..1	N	A short message corresponding to the return code.
ReturnData	~~InformationType~~InformationType	0..1	N	Contains the output data for the response.
Match	boolean	0..1	N	Indicates if the Input BIR matched either the biometric information associated with the Identity Claim or the Reference BIR.
Score	~~Score~~Score	0..1	N	The score if the biometric information matched.

Formatted Table

Formatted Table

Copyright © OASIS Open 2009-2011. All Rights Reserved.

5 Message structure and rules

BIAS operations and data elements are defined in XML in the INCITS 422 BIAS standard. This OASIS standard further specifies the full XML schema (see ~~Annex A~~AnnexA) and specifies how this XML is packaged and exchanged as SOAP messages.

Annex A provides a WSDL of operations and structures aggregated from all the conformance classes, both synchronous and asynchronous. A specific implementation's WSDL must only expose its respective operations and structures. For example, for a Class 5-only conformant implementation, all of the primitive operations must not be exposed as operations (with the exception of QueryCapabilities) unless that functionality is supported. Additionally, the WSDL exposed by an implementation shall not contain instances of xsd:any, xsd:anyType, or xsd:anyAttribute; these instances must be replaced with explicit schema contents. An example is the XML complex type, InformationType, which has xsd:any as its only child. This type is used to represent implementation-specific input data and return data. The children of InformationType must be replaced with explicit content. Doing so removes the ability to transmit unexpected or arbitrary data. Also, it provides a clear definition of information that a client needs to provide to the server,or expect to receive,to optimally perform an operation.

SOAP 1.1 messages consist of three elements: an envelope, header data, and a message body. BIAS request-response elements MUST be enclosed within the SOAP message body. The general structure of the BIAS SOAP message is shown in Figure 4, below. The data model for BIAS is addressed in ~~Section 3~~Section3 and BIAS messages in Section 4.

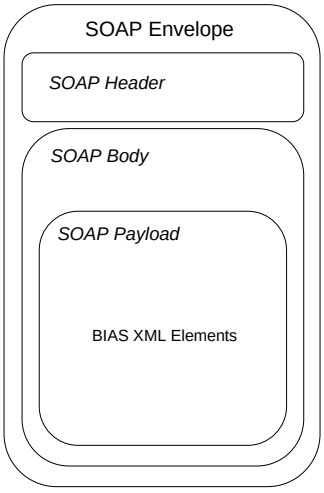

Figure 4. BIAS SOAP Structure

Biometric data, regardless of native format, is carried as a binary structure. As such, options exist on how this data is carried within the SOAP structure. It can be carried as embedded Base-64 objects or ~~[XOP]~~[XOP] can be used – this standard allows for either method (See section 5.3).

Copyright © OASIS Open 2009-2011. All Rights Reserved.

5.1 Purpose and constraints

This document defines a SOAP profile describing how the XML elements defined in INCITS 442 are to be used as the payload of a SOAP message and the rules for structuring and exchanging such messages. Philosophical tenets include:

- SOAP messages will carry BIAS XML ~~[XML10]~~[XML 10] payloads.
- SOAP messages will follow WS-I and will deviate only when absolutely necessary.
- Message structures and interchanges will be kept as simple as possible – "nice to have" features will be addressed in future revisions.
- XML schemas will be produced based on INCITS 442.
- BIAS will support a broad range of application domains.
- BIAS will allow for a variety of biometric and biographic data formats to be used
- Only the SOAP messaging will be defined – no message protocols or client/server agents will be defined.
- Basic usage/formatting rules (beyond WS-I) will be defined.
- Existing biometric and Web services standards will be leveraged wherever possible.
- Sample WSDL and use cases will be provided as an aid in implementation.
- Use of basic SOAP will allow all other compatible WS* standards (and discovery mechanisms) to be used in conjunction with BIAS messaging.
- BIAS will support both secure (i.e., using existing security mechanisms such as WS-Security, SAML, etc,) and non-secure implementations.
- Generic biometric operations will be defined – use of biometrics within a Web services authentication protocol is not addressed.
- OASIS namespace rules will be followed, though some external schemas MAY also be referenced.

5.2 Message requirements

BIAS SOAP messages MUST conform to ~~[WS-I Basic] and [WS-I Bind].~~[WS-I-Basic] and [WS-I-Bind]. A single BIAS SOAP message MUST contain only one BIAS service request (or single BIAS service response). Binary components of BIAS messages are already Base-64 encoded and therefore do not need to be conveyed as SOAP attachments (though XOP MAY be utilized).

Formatted: Font: Not Bold

The system model used for BIAS conversations over SOAP is a simple request-response model. BIAS comprises both synchronous and asynchronous operations, with the majority being of the former type. Asynchronous operations are implemented through message pairs. That is, there are separate messages to request the operation and to request the results of the operation. These have been defined for those operations that are likely to take significant time to complete. For example, an identify operation can be implemented as either a synchronous or asynchronous service as follows:

Copyright © OASIS Open 2009-2011. All Rights Reserved.

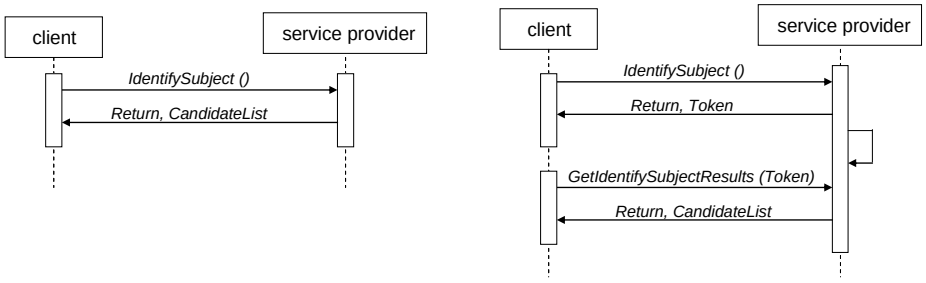

(a) Synchronous Operation (b) Asynchronous Operation

Figure 5. Example of Synchronous and Asynchronous BIAS Operations

The basic process for using SOAP for BIAS operations is:

1. A system entity acting as a BIAS requester transmits a BIAS request element within the body of a SOAP message to a system entity acting as a BIAS responder. The BIAS requester MUST NOT include more than one BIAS request per SOAP message or include any additional XML elements in the SOAP body.
2. The BIAS responder MUST return either a BIAS response element within the body of another SOAP message or generate a SOAP fault. The BIAS responder MUST NOT include more than one BIAS response per SOAP message or include any additional XML elements in the SOAP body. If a BIAS responder cannot, for some reason, process a BIAS request, it MUST generate a SOAP fault. (SOAP 1.1 faults and fault codes are discussed in ~~[SOAP11]~~[SOAP11] section 5.1.)
3. On receiving a BIAS response in a SOAP message, the BIAS requester MUST NOT send a fault code or other error messages to the BIAS responder. Since the format for the message interchange is a simple request-response pattern, adding additional items such as error conditions would needlessly complicate the protocol.

SOAP 1.1 also defines an optional data encoding system. This system is not used within the BIAS SOAP binding. This means that BIAS messages can be transported using SOAP without re-encoding from the "standard" BIAS schema to one based on the SOAP encoding.

> ~~NOTE: [SOAP11]~~NOTE: [SOAP11] references an early draft of the XML Schema specification including an obsolete namespace. BIAS requesters SHOULD generate SOAP documents referencing only the final XML schema namespace. BIAS responders MUST be able to process both the XML schema namespace used in ~~[SOAP11]~~[SOAP11] as well as the final XML schema namespace.

5.3 Handling binary data

BIAS messages frequently contain binary data (e.g., biometric data, scanned identity documents, etc.). Two methods are provided for dealing with this:

- Embedded Base64 encoding
- ~~XOP [XOP]~~
- XOP [XOP]

Use of SOAP with Attachments (SWA) is deprecated.

Copyright © OASIS Open 2009-2011. All Rights Reserved.

5.3.1 Base64 encoding

This method is the default method for including binary data. Binary data is Base64 encoded and included between the tags in the XML SOAP body for the appropriate data elements. Data elements using this method are indicated as such in the schema.

As an example, the CBEFF_BIR_Type includes, as one of the BIR types, BinaryBIR of type base64binary.

```
<xsd:element name="BinaryBIR" type="xs:base64Binary" />
```

However, even an XML_BIR as defined within ~~[CBEFF]~~[CBEFF] Part 3, contains a biometric data block (BDB) which may be entirely binary (most common),

```
<xs:element name="bdb" type="xs:base64Binary" minOccurs="0"/>
```

or contain an element which is binary (e.g., an image within an XML BDB).

5.3.2 Use of XOP

When XOP is used, the binary content is replaced with a reference (URI) to an attachment (i.e., MIME) which contains that ~~"~~stripped" content via an xop:include. The advantage of this method is overall message size during transmission since the overhead of the embedded Base64 is not present (since the MIME attachment contains the native binary format).

Use of XOP is generally transparent to the developer, other than in how they configure their toolset. Most frameworks support this; however, there is a possibility of mismatch if the transmitter supports and uses XOP but the receiver does not.

5.4 Discovery

BIAS implementers (service providers) MUST provide WSDL ~~[WSDL11]~~[WSDL11] to describe their implementations. This WSDL MAY or may not be made public via a standard discovery mechanism (such as UDDI) or other method.

In addition, it is REQUIRED that the BIAS implementation include the ~~QueryCapabilities~~QueryCapabilities operation to provide dynamic information regarding BIAS capabilities, options, galleries, etc. that are supported.

Formatted: Tab stops: 3.35", Left

Formatted: Default Paragraph Font, Font: 10 pt

5.5 Identifying operations

Receivers of BIAS SOAP messages require a method of easily identifying the operation being requested (or response being provided). This SHOULD be possible without the receiver needing to infer it from the sum of the elements provided within the body of the SOAP message. The BIAS SOAP profile allows for two methods of identifying BIAS operations:

- Explicit named element in body of the SOAP message
- Use of WS-Addressing Action element

5.5.1 Operation name element

The BIAS message sender (requester) will include within the body of the BIAS SOAP message an XML element <BIASOperationName>. The receiver (service provider) can search for this tag within a received BIAS SOAP message to determine what operation is being requested. There is no requirement related to the ordering of this element within the message, though it is RECOMMENDED that it be included early in the message to aid in human readability.

Copyright © OASIS Open 2009-2011. All Rights Reserved.

An example of this method for the CreateSubject operation is shown below:

```
POST /bias HTTP/1.1
Host: www.acme.com
Host: www.acme.com
Content-Type: application/soap+xml; charset="utf-8"
Content-Length: nnnn
SOAPAction: ""
<?xml version="1.0"?>
<soap:Envelope xmlns:soap="http://www.w3.org/2003/05/soap-envelope">
    <soap:Body>
         <tns:CreateSubjectRequest
         xmlns:tns="http://docs.oasis-open.org/bias/bias-1.0/">
             <tns:GenericRequestParameters>
                 <tns:Application>BIAS Application</tns:Application>
                 <tns:ApplicationUser>BIAS User</tns:ApplicationUser>
                 <tns:BIASOperationName>CreateSubject</tns:BIASOperationName
>
              </tns:GenericRequestParameters>
              <tns:Identity>
                  <tns:SubjectID>123456789</tns:SubjectID>
              </tns:Identity>
          </tns:CreateSubjectRequest>
      </soap:Body>
</soap:Envelope>
```

5.5.2 WS-Addressing Action

WS-Addressing [WS-Addr][WS-Addr] provides a mechanism for including action information inside any SOAP message. The information is in the SOAP Header. The WS-Addressing 'Action' element is used to indicate the intent of the message. The value is a URI/IRI identifying that intent; however, there are no restrictions on the format or specificity of the URI/IRI norIRInor a requirement that it can be resolved. Adoption of this option also requires that the WS-Addressing 'To', 'ReplyTo', and 'MessageID' elements are supplied, as they are mandatory elements in a request-reply message pattern as used within BIAS. Response messages would also need to use WS-Addressing, requiring the 'To' (matching the 'ReplyTo' element in the request), 'RelatesTo' (matching the 'MessageID' element in the request), and 'RelationshipType' (default value to "wsa:Reply") elements.

Use of WS-Addressing is OPTIONAL in this profile as is this method of using the 'Action' field for this purpose. However, when BIAS is used within an environment using WS-Addressing, it is RECOMMENDED that this approach for use of the 'Action' field to carry the BIAS operation name is employed, either alone or in combination with the BIASOperationName approach described in section 5.4.1.

An example for a message request for the CreateSubject operation would look like thelikethe following:

```
      POST /bias HTTP/1.1
      Host: www.acme.com
```


Copyright © OASIS Open 2009-2011. All Rights Reserved.

```
Host: www.acme.com
Content-Type: application/soap+xml; charset="utf-8"
Content-Length: nnnn
SOAPAction: ""
<?xml version="1.0"?>
<soap:Envelope xmlns:soap="http://www.w3.org/2003/05/soap-envelope"
                    xmlns:wsa="http://schemas.xmlsoap.org/ws/2004/08/addr
essing">
      <soap:Header>
            <wsa:MessageID>some-ID</wsa:MessageID>
            <wsa:ReplyTo>
                  <wsa:Address>response-URI</wsa:Address>
            </wsa:ReplyTo>
            <wsa:To>destination-URI</wsa:To>
            <wsa:Action>CreateSubject</wsa:Action>
      </soap:Header>
      <soap:Body>
            <tns:CreateSubjectRequest

xmlns:tns="http://docs.oasis-open.org/bias/bias-1.0/" />
      </soap:Body>
</soap:Envelope>
```

5.6 Security

The end-points that exchange SOAP messages (or handle the contents of the BIAS operations) are expected to be protected and trusted such that message-level security mechanisms may not be required. The use of SSL (HTTPS) or VPN technology that provides end-point to end-point security is RECOMMENDED and MAY be sufficient in some cases. Other mechanisms such as Signed XML or WSS ~~[WSS]~~[WSS] could also be implemented.

Unless stated otherwise, the following security statements apply to all BIAS bindings.

5.6.1 Use of SSL 3.0 or TLS 1.0

Unless otherwise specified, in any BIAS binding's use of SSL 3.0 ~~[SSL3]~~[SSL3] or TLS1.0 ~~[RFC2246]~~[RFC2246], servers MUST authenticate clients using a X.509 v3 certificate ~~[X509]~~[X509]. The client MUST establish server identity based on contents of the certificate (typically through examination of the certificate's subject DN field, subjectAltName attribute, etc.).

Use of transport level security in the form of SSL or TLS is OPTIONAL but highly RECOMMENDED. Use of these mechanisms alone may not be sufficient for end-to-end integrity and confidentiality, however (see 5.5.3 and 5.5.4 below).

Formatted: Font: Not Bold

Formatted: Font: Not Bold, Font color: Custom Color(RGB(0,0,204))

5.6.2 Data Origin Authentication

Authentication of both the BIAS requester and the BIAS responder associated with a message is OPTIONAL and depends on the environment of use: Authentication mechanisms available at the SOAP message exchange layer or from the underlying substrate protocol (for example, in many bindings the SSL/TLS or HTTP protocol) MAY be utilized to provide data origin authentication.

Copyright © OASIS Open 2009-2011. All Rights Reserved.

Transport authentication will not meet end-to-end origin authentication requirements in bindings where the BIAS SOAP message passes through an intermediary – in this case, message authentication is RECOMMENDED.

Note that SAML ~~[SAML]~~[SAML] MAY be used as the mechanism for parties to authenticate to one another.

5.6.3 Message Integrity

Message integrity of both BIAS requests and BIAS responses is OPTIONAL and depends on the environment of use. The security layer in the underlying substrate protocol or a mechanism at the SOAP message exchange layer MAY be used to ensure message integrity.

Transport integrity will not meet end-to-end integrity requirements in bindings where the BIAS SOAP message passes through an intermediary – in this case, message integrity is RECOMMENDED.

5.6.4 Message Confidentiality

Message confidentiality of both BIAS requests and BIAS responses is OPTIONAL and depends on the environment of use. The security layer in the underlying substrate protocol or a mechanism at the SOAP message exchange layer MAY be used to ensure message confidentiality.

Transport confidentiality will not meet end-to-end confidentiality requirements in bindings where the BIAS SOAP message passes through an intermediary.

NOTE: Biometric and biographic data is likely to contain personal information the confidentiality of which SHOULD be protected accordingly. See INCITS 442, section 6.3 for further discussion.

5.6.5 CBEFF BIR security features

Within BIAS, biometric data is transferred within a CBEFF BIR (as defined in ISO/IEC 19785-1). CBEFF provides for the optional encryption of the Biometric Data Block (BDB) of the BIR and for the integrity of the entire BIR. If implemented, this is indicated in the BIR header. The BIR structure defines an optional Security Block which MAY contain a digital signature (or message authentication code), encryption parameters (e.g., key name, algorithm, etc.), and/or other security related data. Such protections are associated with an individual BIR and are separate from any other protections provided at the message level.

5.6.6 Security Considerations

Before deployment, each combination of authentication, message integrity, and confidentiality mechanisms SHOULD be analyzed for vulnerability in the context of the specific protocol exchange and the deployment environment.

Special care should be given to the impact of possible caching on security.

IETF RFC 2617 ~~[RFC2617]~~[RFC2617] describes possible attacks in the HTTP environment when basic or message digest authentication schemes are used.

Many of the security considerations identified in ~~[SAML SEC]~~[SAML SEC] MAY also apply.

ISO/IEC 19092 ~~[BIO SEC]~~[BIO SEC] describes a security framework for biometric systems including a minimum set of security requirements addressing integrity, authenticity, and confidentiality of biometric information during transmission and storage. These SHOULD be considered as part of an overall risk management approach.

NOTE: The requirements of ISO/IEC 19092, though useful across many application domains, are required for most biometric system implementations in the financial services environment. Application of this standard would make the requirements of sections 5.5.3 through 5.5.5 mandatory rather than optional. This is highly RECOMMENDED for any high security environment or where privacy concerns exist.

Copyright © OASIS Open 2009-2011. All Rights Reserved.

5.6.7 Security of Stored Data

This specification does not address security considerations for stored data. It is the purview of the BIAS service provider to implement security mechanisms and protect data at rest as per their own security policies.

5.6.8 Key Management

This specification does not address key management considerations with respect to implementation of cryptographic security mechanisms (e.g., for authenticity, integrity, or confidentiality).

5.7 Use with other WS* standards

The intent of specifying SOAP bindings for BIAS messages is to enable the full range of existing Web services standards to be able to be applied. Some may be normative while others can be optionally applied (i.e., WS-Security, WS-Addressing). Still others may require additional profiling to be used in an interoperable manner (e.g., WS-Notification); this is left to a future revision. However, the intent is to avoid specifying anything in the first, base version that would preclude the use of such standards in the future.

5.8 Tailoring

This standard provides for a common method of implementing biometric Web services; however, it does not guarantee interoperability in a specific application. In some cases further tailoring or profiling of this standard may be required in order to further constrain the implementation options available.

NOTE: As an example, BIAS allows for a number of different biographic and biometric data formats to be used, whereas a given application/domain MAY wish to limit this to a small set or just one of each type. Other examples (not comprehensive) include:

- Identification of a subset of BIAS operations to be used
- Specification of security features to be implemented (e.g., SSL, CBEFF BIR encryption, etc.)
- Choice of operation name identification method
- Choice of BIR type to be used (XML, non-XML, or URI)
- Further definition of aggregate operations
- Use (or not) of the encounter model
- Use (or not) of asynchronous operations
- Process sequences
- Implementation specific values (e.g., Transform oprerations/controls)

Copyright © OASIS Open 2009-2011. All Rights Reserved.

6 Error handling

There are two levels of errors that can be returned in an error response: system and service errors.

- System-level errors occur when the implementing system cannot service a request. They could result due to an internal logic error or because the implementing system does not support a particular request.
- Service-level errors occur when there is a problem transmitting or representing the service request. They could result due to an invalid service request or because of a communications error.

The INCITS BIAS standard defines the error condition codes for system-level errors.

- If successful, a response message (containing a return code) will be generated.
- If unsuccessful, a SOAP fault message (containing a fault code) will be generated.

6.1 BIAS operation return codes

If a BIAS operation is successful, a response (service output) will be sent to the requester by the service provider. Each response message contains a response status (see section 3.2.37) and return code (see section 3.2.38) along with any response data as defined for that operation, if any. A response code of '0' indicates success.

6.2 SOAP fault codes

If a BIAS operation is unsuccessful, no BIAS response message is sent. Instead a SOAP fault message is returned.

Every Web service (operation) described in the BIAS WSDL may result in a fault message that will be returned in the response by the service provider in the event of an error. The fault message contains a FaultCode element as defined by the SOAP 1.1 specification (see section 3.2.5). The fault message MUST contain a Detail element in a common format, as described by the BIASFault element (see section 3.2.6).

The schema provided in Annex A defines "BIASFaultCode" and "BIASFaultDetail" types as well as "BIASFault", "BIASFaultType", "BIASFaultMessage" and "BIASFaultDescription" elements.

The list of defined BIAS fault codes is provided in section 3.2.5. Note that BIAS service providers MAY define additional fault codes unique to their service.

NOTE: See also section 5.2 for additional information on message returns and faults.

Copyright © OASIS Open 2009-2011. All Rights Reserved.

7 Conformance

Implementations claiming conformance to this standard, MUST implement, at a minimum, all mandatory requirements and provisions set forth in Clauses 3, 4, 5 and 6. If such implementations claim conformance to any OPTIONAL requirements and provisions stated in Clauses 3, 4, 5 and 6, these requirements and provisions MUST be implemented as set forth in these Clauses.

~~INCITS 442 [INCIS-BIAS]~~INCITS 442 [INCITS-BIAS] (Annex A) specifies five BIAS conformance classes. For each class, a set of mandatory BIAS operations is identified in order for implementations (BIAS service providers) to claim conformance. These categories are:

- Class 1: Full Primitive Services Implementation
- Class 2: Full Aggregate Services Implementation
- Class 3: Limited Primitive Services Implementation
- Class 4: Minimum Primitive Services Implementation
- Class 5: Minimum Aggregate Services Implementation

In addition, the minimum capability information to be returned in response to a Query Capabilities request (the only mandatory BIAS operation across all 5 classes) is specified for each class.

These conformance classes and their associated requirements apply to this BIAS SOAP Profile.

There are no minimum set of operations required to be implemented by BIAS requesters; however, any operations implemented must conform to the requirements of Clauses 3 and 4 and those requirements within Clause 5 that are mandatory and are not specific to BIAS responders.

Copyright © OASIS Open 2009-2011. All Rights Reserved.

Annex A. XML Schema

```
<?xml version="1.0" encoding="UTF-8"?>
<!--
Document   : BIAS.xml
Created on : December 17, 2009, 9:31 AM
Last Edit  : December 6, 2010 by Kevin Mangold, National Institute of Standards and Technology
Description:
This document represents the WSDL definitions of BIAS Profile.
-->
<wsdl:definitions
xmlns:wsdl="http://schemas.xmlsoap.org/wsdl/"
xmlns:soap="http://schemas.xmlsoap.org/wsdl/soap/"
xmlns:http="http://schemas.xmlsoap.org/wsdl/http/"
xmlns:xsd="http://www.w3.org/2001/XMLSchema"
xmlns:soapenc="http://schemas.xmlsoap.org/soap/encoding/"
xmlns:mime="http://schemas.xmlsoap.org/wsdl/mime/"
xmlns:iso-iec19785-3-7="urn:oid:1.1.19785.0.257.1.7.0"
xmlns:tns="http://docs.oasis-open.org/bias/ns/bias-1.0/" targetNamespace="http://docs.oasis-open.org/bias/ns/bias-1.0/">
  targetNamespace="http://docs.oasis-open.org/bias/ns/bias-1.0/">

  <wsdl:types>
    <xsd:schema xmlns:xsd="http://www.w3.org/2001/XMLSchema" elementFormDefault="qualified"
targetNamespace="http://docs.oasis-open.org/bias/ns/bias-1.0/">
      <xsd:import namespace="urn:oid:1.1.19785.0.257.1.7.0" schemaLocation="cbeff.xsd" />
      <xsd:complexType name="AggregateRequestTemplate" abstract="true">
        <xsd:annotation>
          <xsd:documentation>Base template for BIAS aggregate service requests.</xsd:documentation>
        </xsd:annotation>
        <xsd:complexContent>
          <xsd:extension base="tns:RequestTemplate">
            <xsd:sequence>
              <xsd:element name="ProcessingOptions" type="tns:ProcessingOptionsType" minOccurs="1" maxOccurs="1">
                <xsd:annotation>
                  <xsd:documentation>Options that guide how the aggregate service request is
processed.</xsd:documentation>
                </xsd:annotation>
              </xsd:element>
```

Formatted: Space Before: 4 pt, After: 4 pt, Adjust space between Latin and Asian text, Adjust space between Asian text and numbers

Formatted: Space Before: 4 pt, After: 4 pt, Adjust space between Latin and Asian text, Adjust space between Asian text and numbers

Formatted: Space Before: 4 pt, After: 4 pt, Adjust space between Latin and Asian text, Adjust space between Asian text and numbers

Formatted: Space Before: 4 pt, After: 4 pt, Adjust space between Latin and Asian text, Adjust space between Asian text and numbers

Formatted: Space Before: 4 pt, After: 4 pt, Adjust space between Latin and Asian text, Adjust space between Asian text and numbers

Copyright © OASIS Open 2009-2011. All Rights Reserved. Standards Track Work Product

```
1179        <xsd:element name="InputData" type="tns:InformationType" minOccurs="1" maxOccurs="1">
1180          <xsd:annotation>
1181            <xsd:documentation>Contains the input data for the aggregate service request.</xsd:documentation>
1182          </xsd:annotation>
1183        </xsd:element>
1184      </xsd:sequence>
1185    </xsd:extension>
1186  </xsd:complexContent>
1187 </xsd:complexType>
1188 <xsd:complexType name="AggregateResponseTemplate" abstract="true">
1189   <xsd:annotation>
1190     <xsd:documentation>Base template for BIAS aggregate service responses.</xsd:documentation>
1191   </xsd:annotation>
1192   <xsd:complexContent>
1193     <xsd:extension base="tns:ResponseTemplate">
1194       <xsd:sequence>
1195         <xsd:element name="ReturnData" type="tns:InformationType" minOccurs="0" maxOccurs="1">
1196           <xsd:annotation>
1197             <xsd:documentation>Contains the output data for the aggregate service response.</xsd:documentation>
1198           </xsd:annotation>
1199         </xsd:element>
1200       </xsd:sequence>
1201     </xsd:extension>
1202   </xsd:complexContent>
1203 </xsd:complexType>
1204 <xsd:simpleType name="ApplicationIdentifier">
1205   <xsd:annotation>
1206     <xsd:documentation>Identifies an application.</xsd:documentation>
1207   </xsd:annotation>
1208   <xsd:restriction base="xsd:string">
1209     <xsd:minLength value="1" />"/>
1210     <xsd:maxLength value="255" />"/>
1211   </xsd:restriction>
1212 </xsd:simpleType>
1213 <xsd:simpleType name="ApplicationUserIdentifier">
1214   <xsd:annotation>
1215     <xsd:documentation>Identifies an application user or instance.</xsd:documentation>
1216   </xsd:annotation>
1217   <xsd:restriction base="xsd:string">
```


Copyright © OASIS Open 2009-2011. All Rights Reserved.

```
        <xsd:minLength value="1" />"/>
        <xsd:maxLength value="255" />"/>
    </xsd:restriction>
  </xsd:simpleType>
  <xsd:complexType name="BIASBiometricDataType">
    <xsd:annotation>
      <xsd:documentation>Wraps the various BIAS biometric types.</xsd:documentation>
    </xsd:annotation>
    <xsd:sequence>
      <xsd:element name="BIRList" type="tns:CBEFF_BIR_ListType" minOccurs="0" maxOccurs="1">
        <xsd:annotation>
          <xsd:documentation>A list of CBEFF-BIR elements.</xsd:documentation>
        </xsd:annotation>
      </xsd:element>
      <xsd:element name="BIR" type="tns:CBEFF_BIR_Type" minOccurs="0" maxOccurs="1">
        <xsd:annotation>
          <xsd:documentation>Contains biometric information in either a non-XML and an XML
representation.</xsd:documentation>
        </xsd:annotation>
      </xsd:element>
      <xsd:element name="InputBIR" type="tns:CBEFF_BIR_Type" minOccurs="0" maxOccurs="1">
        <xsd:annotation>
          <xsd:documentation>Maps to specific INCITS BIAS elements as required by that
specification.</xsd:documentation>
        </xsd:annotation>
      </xsd:element>
      <xsd:element name="ReferenceBIR" type="tns:CBEFF_BIR_Type" minOccurs="0" maxOccurs="1">
        <xsd:annotation>
          <xsd:documentation>Maps to specific INCITS BIAS elements as required by that
specification.</xsd:documentation>
        </xsd:annotation>
      </xsd:element>
      <xsd:element name="BiometricDataList" type="tns:BiometricDataListType" minOccurs="0" maxOccurs="1">
        <xsd:annotation>
          <xsd:documentation>A list of biometric data elements.</xsd:documentation>
        </xsd:annotation>
      </xsd:element>
    </xsd:sequence>
  </xsd:complexType>
  <xsd:simpleType name="BIASFaultCode">
```


Copyright © OASIS Open 2009-2011. All Rights Reserved.

```
1258        <xsd:annotation>
1259          <xsd:documentation></></xsd:documentation>
1260        </xsd:annotation>
1261        <xsd:restriction base="xsd:unsignedLongstring">
1262          <xsd:enumeration value="UNKNOWN_ERROR">
1263            <xsd:annotation>
1264              <xsd:documentation>The service failed for an unknown reason.</xsd:documentation>
1265            </xsd:annotation>
1266          </xsd:enumeration>
1267          <xsd:enumeration value="UNSUPPORTED_CAPABILITY">
1268            <xsd:annotation>
1269              <xsd:documentation>A requested capability is not supported by the service
1270          implementation.</xsd:documentation>
1271            </xsd:annotation>
1272          </xsd:enumeration>
1273          <xsd:enumeration value="INVALID_INPUT">
1274            <xsd:annotation>
1275              <xsd:documentation>The data in a service input parameter is invalid.</xsd:documentation>
1276            </xsd:annotation>
1277          </xsd:enumeration>
1278          <xsd:enumeration value="BIR_QUALITY_ERROR">
1279            <xsd:annotation>
1280              <xsd:documentation>Biometric sample quality is too poor for the service to succeed.</xsd:documentation>
1281            </xsd:annotation>
1282          </xsd:enumeration>
1283          <xsd:enumeration value="INVALID_BIR">
1284            <xsd:annotation>
1285              <xsd:documentation>The input BIR is empty or in an invalid or unrecognized format.</xsd:documentation>
1286            </xsd:annotation>
1287          </xsd:enumeration>
1288          <xsd:enumeration value="BIR_SIGNATURE_FAILURE">
1289            <xsd:annotation>
1290              <xsd:documentation>The service could not validate the signature, if used, on the input
1291          BIR.</xsd:documentation>
1292            </xsd:annotation>
1293          </xsd:enumeration>
1294          <xsd:enumeration value="BIR_DECRYPTION_FAILURE">
1295            <xsd:annotation>
1296              <xsd:documentation>The service could not decrypt an encrypted input BIR.</xsd:documentation>
1297            </xsd:annotation>
```

Formatted: English (U.S.)

Formatted: English (U.S.)

Formatted: English (U.S.)

Copyright © OASIS Open 2009-2011. All Rights Reserved.

```
        </xsd:enumeration>
        <xsd:enumeration value="INVALID_ENCOUNTER_ID">
          <xsd:annotation>
            <xsd:documentation>The input encounter ID is empty or in an invalid format.</xsd:documentation>
          </xsd:annotation>
        </xsd:enumeration>
        <xsd:enumeration value="INVALID_SUBJECT_ID">
          <xsd:annotation>
            <xsd:documentation>The input subject ID is empty or in an invalid format.</xsd:documentation>
          </xsd:annotation>
        </xsd:enumeration>
        <xsd:enumeration value="UNKNOWN_SUBJECT">
          <xsd:annotation>
            <xsd:documentation>The subject referenced by the input subject ID does not exist.</xsd:documentation>
          </xsd:annotation>
        </xsd:enumeration>
        <xsd:enumeration value="UNKNOWN_GALLERY">
          <xsd:annotation>
            <xsd:documentation>The gallery referenced by the input gallery ID does not exist.</xsd:documentation>
          </xsd:annotation>
        </xsd:enumeration>
        <xsd:enumeration value="UNKNOWN_ENCOUNTER">
          <xsd:annotation>
            <xsd:documentation>The encounter referenced by the input encounter ID does not
exist.</xsd:documentation>
          </xsd:annotation>
        </xsd:enumeration>
        <xsd:enumeration value="UNKNOWN_BIOGRAPHIC_FORMAT">
          <xsd:annotation>
            <xsd:documentation>The biographic data format is not known or not supported.</xsd:documentation>
          </xsd:annotation>
        </xsd:enumeration>
        <xsd:enumeration value="UNKNOWN_IDENTITY_CLAIM">
          <xsd:annotation>
            <xsd:documentation>The identity referenced by the input identity claim does not exist.</xsd:documentation>
          </xsd:annotation>
        </xsd:enumeration>
        <xsd:enumeration value="INVALID_IDENTITY_CLAIM">
          <xsd:annotation>
```


Copyright © OASIS Open 2009-2011. All Rights Reserved. Standards Track Work Product

```
            <xsd:documentation>The identity claim requested is already in use.</xsd:documentation>
        </xsd:annotation>
    </xsd:enumeration>
    <xsd:enumeration value="NONEXISTANT_DATA">
        <xsd:annotation>
            <xsd:documentation>The data requested for deletion does not exist.</xsd:documentation>
        </xsd:annotation>
    </xsd:enumeration>
  </xsd:restriction>
 </xsd:simpleType>
 <xsd:complexType name="BIASFaultDetail">
  <xsd:annotation>
   <xsd:documentation>Defines the error information associated with a SOAP fault.</xsd:documentation>
  </xsd:annotation>
  <xsd:sequence>
   <xsd:element minOccurs="1" maxOccurs="1" name="BIASFaultType" type="tns:BIASFaultCode">
    <xsd:annotation>
     <xsd:documentation>References an error code.</xsd:documentation>
    </xsd:annotation>
   </xsd:element>
   <xsd:element minOccurs="1" maxOccurs="1" name="BIASFaultMessage" type="xsd:string">
    <xsd:annotation>
     <xsd:documentation>Provides an explanation of the fault.</xsd:documentation>
    </xsd:annotation>
   </xsd:element>
   <xsd:element minOccurs="0" maxOccurs="1" name="BIASFaultDescription" type="xsd:string">
    <xsd:annotation>
     <xsd:documentation>Provides detailed information about a BIAS fault, such as trace
details.</xsd:documentation>
    </xsd:annotation>
   </xsd:element>
  </xsd:sequence>
 </xsd:complexType>
 <xsd:complexType name="BIASIdentity">
  <xsd:annotation>
   <xsd:documentation>
    Defines a single element for encapsulating the data associated
    with an Identity.  Includes the Identity's reference identifiers,
    biographic data, and biometric data.
```


Copyright © OASIS Open 2009-2011. All Rights Reserved.

```
        </xsd:documentation>
      </xsd:annotation>
      <xsd:sequence>
        <xsd:element name="SubjectID" type="tns:BIASIDType" minOccurs="0" maxOccurs="1">
          <xsd:annotation>
            <xsd:documentation>A system unique identifier for a subject.</xsd:documentation>
          </xsd:annotation>
        </xsd:element>
        <xsd:element name="IdentityClaim" type="tns:BIASIDType" minOccurs="0" maxOccurs="1">
          <xsd:annotation>
            <xsd:documentation>An identifier by which a subject is known to a particular gallery or population group.</xsd:documentation>
          </xsd:annotation>
        </xsd:element>
        <xsd:element name="EncounterID" type="tns:BIASIDType" minOccurs="0" maxOccurs="1">
          <xsd:annotation>
            <xsd:documentation>The identifier of an encounter associated with the subject, required for encounter-centric models.</xsd:documentation>
          </xsd:annotation>
        </xsd:element>
        <xsd:element name="EncounterList" type="tns:EncounterListType" minOccurs="0" maxOccurs="1">
          <xsd:annotation>
            <xsd:documentation>A list of encounters associated with a subject.</xsd:documentation>
          </xsd:annotation>
        </xsd:element>
        <xsd:element name="BiographicData" type="tns:BiographicDataType" minOccurs="0" maxOccurs="1">
          <xsd:annotation>
            <xsd:documentation>An Identity's biographic data.</xsd:documentation>
          </xsd:annotation>
        </xsd:element>
        <xsd:element name="BiographicDataElements" type="tns:BiographicDataType" minOccurs="0" maxOccurs="1">
          <xsd:annotation>
            <xsd:documentation>An Identity's biographic data elements that are stored in the implementing system.</xsd:documentation>
          </xsd:annotation>
        </xsd:element>
        <xsd:element name="BiometricData" type="tns:BIASBiometricDataType" minOccurs="0" maxOccurs="1">
          <xsd:annotation>
            <xsd:documentation>An Identity's biometric data.</xsd:documentation>
          </xsd:annotation>
```


Copyright © OASIS Open 2009-2011. All Rights Reserved.

```
        </xsd:element>
      </xsd:sequence>
    </xsd:complexType>
    <xsd:simpleType name="BIASIDType">
      <xsd:annotation>
        <xsd:documentation>A BIAS identifier</xsd:documentation>
      </xsd:annotation>
      <xsd:restriction base="xsd:string" />"/>
    </xsd:simpleType>
    <xsd:complexType name="BiographicDataItemType">
      <xsd:annotation>
        <xsd:documentation>Defines a single biographic data element.</xsd:documentation>
      </xsd:annotation>
      <xsd:sequence maxOccurs="unbounded">>
        <xsd:element name="Name" type="xsd:string" minOccurs="1" maxOccurs="1">
          <xsd:annotation>
            <xsd:documentation>The name of the biographic data item.</xsd:documentation>
          </xsd:annotation>
        </xsd:element>
        <xsd:element name="Type" type="xsd:string" minOccurs="1" maxOccurs="1">
          <xsd:annotation>
            <xsd:documentation>The data type for the biographic data item.</xsd:documentation>
          </xsd:annotation>
        </xsd:element>
        <xsd:element name="Value" type="xsd:string" minOccurs="0" maxOccurs="1">
          <xsd:annotation>
            <xsd:documentation>The value assigned to the biographic data item.</xsd:documentation>
          </xsd:annotation>
        </xsd:element>
      </xsd:sequence>
    </xsd:complexType>
    <xsd:complexType name="BiographicDataSetType">
      <xsd:annotation>
        <xsd:documentation>Defines a set of biographic data that is formatted according to the specified
format.</xsd:documentation>
      </xsd:annotation>
      <xsd:sequence>
        <xsd:any namespace="##any">
          <xsd:annotation>
            <xsd:documentation>Biographic data formatted according to a specific format.</xsd:documentation>
```

Formatted: English (U.S.)

Formatted: English (U.S.)

Copyright © OASIS Open 2009-2011. All Rights Reserved.

```
        </xsd:annotation>
      </xsd:any>
    </xsd:sequence>
    <xsd:attributeelement name="name" type="xsd:string" use="requiredminOccurs="1" maxOccurs="1">
      <xsd:annotation>
        <xsd:documentation>The name of the biographic data format. Use these names for common formats: FBI-EFTS, FBI-EBTS, DOD-EBTS, INT-I, NIEM, xNAL, HR-XML.</xsd:documentation>
      </xsd:annotation>
    </xsd:attributeelement>
    <xsd:attributeelement name="version" type="xsd:string" use="optionalminOccurs="0" maxOccurs="1">
      <xsd:annotation>
        <xsd:documentation>The version of the biographic data format (e.g., "7.1"" for FBI-EFTS or "2.0"" for NIEM).</xsd:documentation>
      </xsd:annotation>
    </xsd:attributeelement>
    <xsd:attributeelement name="source" type="xsd:string" use="requiredminOccurs="1" maxOccurs="1">
      <xsd:annotation>
        <xsd:documentation>Reference to a URI/IRI describing the biographic data format. For example: (FBI-EFTS) www.fbibiospecs.org, (DOD-EBTS) www.biometrics.dod.mil, (INT-I) www.interpol.int,www.interpol.int, (NIEM) www.niem.gov, (xNAL) www.oasis-open.org, (HR-XML) www.hr-xml.org.</xsd:documentation>
      </xsd:annotation>
    </xsd:attributeelement>
    <xsd:attributeelement name="type" type="xsd:string" use="requiredminOccurs="1" maxOccurs="1">
      <xsd:annotation>
        <xsd:documentation>The biographic data format type. Use these types for common formats: ASCII (e.g., for non-XML versions of FBI-EFTS, FBI-EBTS, DOD-EFTS, or INT-I), XML (e.g., for NIEM, xNAL, and HR-XML or future version of FBI-EBTS).</xsd:documentation>

      </xsd:annotation>
    </xsd:attributeelement>
    <xsd:any namespace="##any">
    <xsd:annotation>
    <xsd:documentation>Biographic data formatted according to a specific format.</xsd:documentation>
    </xsd:annotation>
    </xsd:any>
    </xsd:sequence>
  </xsd:complexType>
  <xsd:complexType name="BiographicDataType">
    <xsd:annotation>
      <xsd:documentation>
        Defines a set of biographic data elements, utilizing either the
```

Formatted: Space Before: 4 pt, After: 4 pt, Adjust space between Latin and Asian text, Adjust space between Asian text and numbers

Formatted: Space Before: 4 pt, After: 4 pt, Adjust space between Latin and Asian text, Adjust space between Asian text and numbers

Copyright © OASIS Open 2009-2011. All Rights Reserved. Standards Track Work Product

```
———BiographicDataItemType to represent a list of elements or the
———BiographicDataSetType to represent a complete, formatted set of
———biographic information.
———</xsd:documentation>
——</xsd:annotation>
——<xsd:choice maxOccurs="unbounded">
——<xsd:sequence>
<xsd:element name="LastName" type="xsd:string" minOccurs="0" maxOccurs="1">
———<xsd:annotation>
———<xsd:documentation>The last name of a subject.</xsd:documentation>
———</xsd:annotation>
——</xsd:element>
——<xsd:element name="FirstName" type="xsd:string" minOccurs="0" maxOccurs="1">
———<xsd:annotation>
———<xsd:documentation>The first name of a subject.</xsd:documentation>
———</xsd:annotation>
——</xsd:element>
——<xsd:element name="BiographicDataItems" minOccurs="0">
<xsd:complexType>
<xsd:sequence>
<xsd:element name="BiographicDataItem" type="tns:BiographicDataItemType" maxOccurs="unbounded">
———<xsd:annotation>
———<xsd:documentation>A single biographic data element.</xsd:documentation>
———</xsd:annotation>
——</xsd:element>
——</xsd:sequence>
</xsd:complexType>
</xsd:element>
<xsd:element name="BiographicDataSet" type="tns:BiographicDataSetType" minOccurs="0" maxOccurs="1">
———<xsd:annotation>
———<xsd:documentation>A set of biographic data information.</xsd:documentation>
———</xsd:annotation>
——</xsd:element>
——</xsd:choicesequence>
—</xsd:complexType>
—<xsd:complexType name="BiometricDataElementType">
——<xsd:annotation>
———<xsd:documentation>
———Provides descriptive information about biometric data, such as
```

Formatted: Space Before: 4 pt, After: 4 pt, Adjust space between Latin and Asian text, Adjust space between Asian text and numbers

Formatted: Space Before: 4 pt, After: 4 pt, Adjust space between Latin and Asian text, Adjust space between Asian text and numbers

Formatted: Space Before: 4 pt, After: 4 pt, Adjust space between Latin and Asian text, Adjust space between Asian text and numbers

Copyright © OASIS Open 2009-2011. All Rights Reserved. Standards Track Work Product

```
the biometric type, subtype, and format, contained in the BDB of
the CBEFF-BIR.
</xsd:documentation>
</xsd:annotation>
<xsd:sequence>
<xsd:element name="BiometricType" type="iso-iec19785-3-7: Multiple typesMultipleTypesType" minOccurs="1"
maxOccurs="1">
<xsd:annotation>
<xsd:documentation>The type of biological or behavioral data stored in the biometric record, as defined by
CBEFF.</xsd:documentation>
</xsd:annotation>
</xsd:element>
<xsd:element name="BiometricTypeCount" type="xsd:positiveInteger" minOccurs="0" maxOccurs="1">
<xsd:annotation>
<xsd:documentation>The number of biometric records having the biometric type recorded in the biometric
type field.</xsd:documentation>
</xsd:annotation>
</xsd:element>
<xsd:element name="BiometricSubType" type="iso-iec19785-3-7: SubtypeSubtypeType" minOccurs="0"
maxOccurs="1">
<xsd:annotation>
<xsd:documentation>More specifically defines the type of biometric data stored in the biometric record, as
defined by CBEFF.</xsd:documentation>
</xsd:annotation>
</xsd:element>
<xsd:element name="BDBFormatOwner" type="iso-iec19785-3-7: Registered-intxsd:positiveInteger"
minOccurs="1" maxOccurs="1">
<xsd:annotation>
<xsd:documentation>Identifies the standards body, working group, industry consortium, or other CBEFF
biometric organization that has defined the format for the biometric data.</xsd:documentation>
</xsd:annotation>
</xsd:element>
<xsd:element name="BDBFormatType" type="iso-iec19785-3-7: Registered-intxsd:positiveInteger"
minOccurs="1" maxOccurs="1">
<xsd:annotation>
<xsd:documentation>Identifies the specific biometric data format specified by the CBEFF biometric
organization recorded in the BDB Format Owner field.</xsd:documentation>
</xsd:annotation>
</xsd:element>
</xsd:sequence>
</xsd:complexType>
```


Copyright © OASIS Open 2009-2011. All Rights Reserved. Standards Track Work Product

```
1577  ——<xsd:complexType name="BiometricDataListType">
1578  ———<xsd:annotation>
1579  ————<xsd:documentation>A list of biometric data elements.</xsd:documentation>
1580  ———</xsd:annotation>
1581  ———<xsd:sequence>
1582  ————<xsd:element name="BiometricDataElement" type="tns:BiometricDataElementType" minOccurs="0"
1583  maxOccurs="unbounded">
1584  ————<xsd:annotation>
1585  ————<xsd:documentation>Data structure containing information about a biometric record.</xsd:documentation>
1586  ————</xsd:annotation>
1587  ———</xsd:element>
1588  ———</xsd:sequence>
1589  ——</xsd:complexType>
1590  ——<xsd:complexType name="CandidateListType">
1591  ———<xsd:annotation>
1592  ———<xsd:documentation>
1593  ————Defines a set of candidates, utilizing the Candidate Type to
1594  ————represent each element in the set.
1595  ———</xsd:documentation>
1596  ———</xsd:annotation>
1597  ———<xsd:sequence>
1598  ———<xsd:element name="Candidate" type="tns:CandidateType" minOccurs="0" maxOccurs="unbounded">
1599  ————<xsd:annotation>
1600  ————<xsd:documentation>A single candidate.</xsd:documentation>
1601  ————</xsd:annotation>
1602  ———</xsd:element>
1603  ———</xsd:sequence>
1604  ——</xsd:complexType>
1605  ——<xsd:complexType name="CandidateType">
1606  ———<xsd:annotation>
1607  ———<xsd:documentation>
1608  ————Defines a single candidate as a possible match in response to a
1609  ————biometric identification request.
1610  ———</xsd:documentation>
1611  ———</xsd:annotation>
1612  ———<xsd:sequence>
1613  ———<xsd:element name="Score" type="tns:Score" minOccurs="0" maxOccurs="1">
1614  ————<xsd:annotation>
1615  ————<xsd:documentation>The match score.</xsd:documentation>
```


Copyright © OASIS Open 2009-2011. All Rights Reserved.— Standards Track Work Product

```
        </xsd:annotation>
      </xsd:element>
      <xsd:element name="BiographicDataRank" type="tns:BiographicDataTypexsd:integer" minOccurs="01"
maxOccurs="1">
        <xsd:annotation>
          <xsd:documentation>Biographic data associated with the candidate match.</xsd:documentation>
        </xsd:annotation>
      </xsd:element>
      <xsd:element name="BIRList" type="tns:CBEFF_BIR_ListType" minOccurs="1" maxOccurs="1">
        <xsd:annotation>
          <xsd:documentation>Biometric data associated with the candidate match.</xsd:documentation>
        </xsd:annotation>
      </xsd:element>
    </xsd:sequence>
    <xsd:attribute name="rank" type="xsd:integer" use="required">
      <xsd:annotation>
        <xsd:documentation>The rank of the candidate in relation to other candidates for the same biometric
identification operation.</xsd:documentation>
      </xsd:annotation>
    </xsd:attributeelement>
    <xsd:element name="BiographicData" type="tns:BiographicDataType" minOccurs="0" maxOccurs="1">
<xsd:annotation>
<xsd:documentation>Biographic data associated with the candidate match.</xsd:documentation>
</xsd:annotation>
</xsd:element>
<xsd:element name="BIRList" type="tns:CBEFF_BIR_ListType" minOccurs="1" maxOccurs="1">
<xsd:annotation>
<xsd:documentation>Biometric data associated with the candidate match.</xsd:documentation>
</xsd:annotation>
</xsd:element>
</xsd:sequence>
</xsd:complexType>
  <xsd:complexType name="CapabilityListType">
    <xsd:annotation>
      <xsd:documentation>Defines a set of capabilities.</xsd:documentation>
    </xsd:annotation>
    <xsd:sequence>
      <xsd:element name="Capability" type="tns:CapabilityType" minOccurs="0" maxOccurs="unbounded">
        <xsd:annotation>
          <xsd:documentation>A single capability.</xsd:documentation>
        </xsd:annotation>
      </xsd:element>
```

Formatted: Space Before: 4 pt, After: 4 pt, Adjust space between Latin and Asian text, Adjust space between Asian text and numbers

Formatted: Space Before: 4 pt, After: 4 pt, Adjust space between Latin and Asian text, Adjust space between Asian text and numbers

Copyright © OASIS Open 2009-2011. All Rights Reserved. Standards Track Work Product

```
    </xsd:sequence>
  </xsd:complexType>
  <xsd:simpleType name="CapabilityName">
    <xsd:annotation>
      <xsd:documentation>A list of capability items.</xsd:documentation>
    </xsd:annotation>
    <xsd:restriction base="xsd:string">
      <xsd:enumeration value="AggregateInputDataOptional">
        <xsd:annotation>
          <xsd:documentation>A data element accepted as optional input by the implementing system for the aggregate services.</xsd:documentation>
        </xsd:annotation>
      </xsd:enumeration>
      <xsd:enumeration value="AggregateInputDataRequired">
        <xsd:annotation>
          <xsd:documentation>A data element required as input by the implementing system for the aggregate services.</xsd:documentation>
        </xsd:annotation>
      </xsd:enumeration>
      <xsd:enumeration value="AggregateProcessingOption">
        <xsd:annotation>
          <xsd:documentation>A processing option supported by the implementing system for the aggregate services.</xsd:documentation>
        </xsd:annotation>
      </xsd:enumeration>
      <xsd:enumeration value="AggregateReturnData">
        <xsd:annotation>
          <xsd:documentation>A data element returned by the implementing system for the aggregate services.</xsd:documentation>
        </xsd:annotation>
      </xsd:enumeration>
      <xsd:enumeration value="AggregateServiceDescription">
        <xsd:annotation>
          <xsd:documentation>Describes the processing logic of an aggregate service supported by the implementing system.</xsd:documentation>
        </xsd:annotation>
      </xsd:enumeration>
      <xsd:enumeration value="BiographicDataSet">
        <xsd:annotation>
          <xsd:documentation>Identifies a biographic data set supported by the implementing system.</xsd:documentation>
```


Copyright © OASIS Open 2009-2011. All Rights Reserved.— Standards Track Work Product

```
        </xsd:annotation>
      </xsd:enumeration>
      <xsd:enumeration value="CBEFFPatronFormat">
        <xsd:annotation>
          <xsd:documentation>A patron format supported by the implementing system.</xsd:documentation>
        </xsd:annotation>
      </xsd:enumeration>
      <xsd:enumeration value="ClassificationAlgorithmType">
        <xsd:annotation>
          <xsd:documentation>A classification algorithm type supported by the implementing
system.</xsd:documentation>
        </xsd:annotation>
      </xsd:enumeration>
      <xsd:enumeration value="ConformanceClass">
        <xsd:annotation>
          <xsd:documentation>Identifies the conformance class of the BIAS implementation.</xsd:documentation>
        </xsd:annotation>
      </xsd:enumeration>
      <xsd:enumeration value="Gallery">
        <xsd:annotation>
          <xsd:documentation>A gallery or population group supported by the implementing
system.</xsd:documentation>
        </xsd:annotation>
      </xsd:enumeration>
      <xsd:enumeration value="IdentityModel">
        <xsd:annotation>
          <xsd:documentation>Identifies whether the implementing system is person-centric or encounter-centric
based.</xsd:documentation>
        </xsd:annotation>
      </xsd:enumeration>
      <xsd:enumeration value="MatchScore">
        <xsd:annotation>
          <xsd:documentation>Identifies the use of match scores returned by the implementing
system.</xsd:documentation>
        </xsd:annotation>
      </xsd:enumeration>
      <xsd:enumeration value="QualityAlgorithm">
        <xsd:annotation>
          <xsd:documentation>A quality algorithm vendor and algorithm vendor product ID supported by the
implementing system.</xsd:documentation>
```

Formatted: Font: Calibri

Copyright © OASIS Open 2009-2011. All Rights Reserved.

```
        </xsd:annotation>
      </xsd:enumeration>
      <xsd:enumeration value="SupportedBiometric">
        <xsd:annotation>
          <xsd:documentation>A biometric type supported by the implementing system.</xsd:documentation>
        </xsd:annotation>
      </xsd:enumeration>
      <xsd:enumeration value="TransformOperation">
        <xsd:annotation>
          <xsd:documentation>A transform operation type supported by the implementing
system.</xsd:documentation>
        </xsd:annotation>
      </xsd:enumeration>
    </xsd:restriction>
  </xsd:simpleType>
  <xsd:complexType name="CapabilityType">
    <xsd:annotation>
      <xsd:documentation>Defines a single capability supported by an implementing system.</xsd:documentation>
    </xsd:annotation>
    <xsd:sequence>
      <xsd:element name="CapabilityName" type="tns:CapabilityName" minOccurs="1" maxOccurs="1">
        <xsd:annotation>
          <xsd:documentation>The name of the capability.</xsd:documentation>
        </xsd:annotation>
      </xsd:element>
      <xsd:element name="CapabilityID" type="xsd:string" minOccurs="0" maxOccurs="1">
        <xsd:annotation>
          <xsd:documentation>An identifier assigned to the capability by the implementing
system.</xsd:documentation>
        </xsd:annotation>
      </xsd:element>
      <xsd:element name="CapabilityDescription" type="xsd:string" minOccurs="0" maxOccurs="1">
        <xsd:annotation>
          <xsd:documentation>A description of the capability.</xsd:documentation>
        </xsd:annotation>
      </xsd:element>
      <xsd:element name="CapabilityValue" type="xsd:string" minOccurs="0" maxOccurs="1">
        <xsd:annotation>
          <xsd:documentation>A value assigned to the capability.</xsd:documentation>
        </xsd:annotation>
```


Copyright © OASIS Open 2009-2011. All Rights Reserved.

```
        </xsd:element>
        <xsd:element name="CapabilitySupportingValue" type="xsd:string" minOccurs="0" maxOccurs="1">
          <xsd:annotation>
            <xsd:documentation>A secondary value supporting the capability.</xsd:documentation>
          </xsd:annotation>
        </xsd:element>
        <xsd:element name="CapabilityAdditionalInfo" type="xsd:string" minOccurs="0" maxOccurs="1">
          <xsd:annotation>
            <xsd:documentation>Contains additional information for the supported capability.</xsd:documentation>
          </xsd:annotation>
        </xsd:element>
      </xsd:sequence>
    </xsd:complexType>
    <xsd:complexType name="CBEFF_BIR_ListType">
      <xsd:annotation>
        <xsd:documentation>A list of CBEFF-BIR elements.</xsd:documentation>
      </xsd:annotation>
      <xsd:sequence>
        <xsd:element name="BIR" type="tns:CBEFF_BIR_Type" minOccurs="0" maxOccurs="unbounded">
          <xsd:annotation>
            <xsd:documentation>CBEFF structure containing information about a biometric sample.</xsd:documentation>
          </xsd:annotation>
        </xsd:element>
      </xsd:sequence>
    </xsd:complexType>
    <xsd:complexType name="CBEFF_BIR_Type">
      <xsd:annotation>
        <xsd:documentation>Represents biometric information, with either a non-XML or XML
representation.</xsd:documentation>
      </xsd:annotation>
      <xsd:sequence>
        <xsd:element name="FormatOwner" type="xsd:positiveInteger" minOccurs="1" maxOccurs="1" />
        <xsd:element name="FormatType" type="xsd:positiveInteger" minOccurs="1" maxOccurs="1" />
        <xsd:element name="BIR_Information" minOccurs="0" maxOccurs="1">
          <xsd:complexType>
            <xsd:sequence>
              <xsd:element name="bir-infoBIR_Info" type="iso-iec19785-3-7:BIR-infoBIRInfoType" minOccurs="0"
maxOccurs="1"/>
              <xsd:element name="bdb-infoBDB_Info" type="iso-iec19785-3-7:BDB-infoBDBInfoType" minOccurs="0"
maxOccurs="1"/>
```

Formatted: Font: Calibri

Formatted: Space Before: 4 pt, After: 4 pt, Adjust space between Latin and Asian text, Adjust space between Asian text and numbers

Copyright © OASIS Open 2009-2011. All Rights Reserved. Standards Track Work Product

```
        <xsd:element name="sb_infoSB_Info" type="iso-iec19785-3-7:SB_infoSBInfoType" minOccurs="0"
maxOccurs="1"/>
      </xsd:sequence>
    </xsd:complexType>
  </xsd:element>
  <xsd:element name="BIR" minOccurs="1" maxOccurs="1">type="tns:BaseBIRType" />
    <</xsd:sequence>
</xsd:complexType>
    <xsd:choice minOccurs="1" maxOccurs="1">
      <<xsd:complexType name="BaseBIRType">
</xsd:elementcomplexType>
<xsd:complexType name="BinaryBIR">
<xsd:complexContent>
<xsd:extension base="tns:BaseBIRType">
<xsd:sequence>
<xsd:element name="Binary" type="xsxsd:base64Binary" />
      <</xsd:elementsequence>
</xsd:extension>
</xsd:complexContent>
</xsd:complexType>
<xsd:complexType name="URI_BIR">
<xsd:complexContent>
<xsd:extension base="tns:BaseBIRType">
<xsd:sequence>
<xsd:element name="URI" type="xsxsd:anyURI" />
      <</xsd:elementsequence>
</xsd:extension>
</xsd:complexContent>
</xsd:complexType>
<xsd:complexType name="XML_BIR">
<xsd:complexContent>
<xsd:extension base="tns:BaseBIRType">
<xsd:sequence>
<xsd:element name="XML" type="iso-iec19785-3-7:BIRBIRType" />
      </xsd:choicesequence>
    </xsd:extension>
</xsd:complexContent>
</xsd:complexType>
  </xsd:element>
</xsd:sequence>
```

Formatted: Space Before: 4 pt, After: 4 pt, Adjust space between Latin and Asian text, Adjust space between Asian text and numbers

Formatted: Space Before: 4 pt, After: 4 pt, Adjust space between Latin and Asian text, Adjust space between Asian text and numbers

Formatted: Space Before: 4 pt, After: 4 pt, Adjust space between Latin and Asian text, Adjust space between Asian text and numbers

Formatted: Space Before: 4 pt, After: 4 pt, Adjust space between Latin and Asian text, Adjust space between Asian text and numbers

Formatted: Space Before: 4 pt, After: 4 pt, Adjust space between Latin and Asian text, Adjust space between Asian text and numbers

Copyright © OASIS Open 2009-2011. All Rights Reserved.

```
    <xsd:attribute name="format-owner" type="iso-iec19785-3-7:Registered-int" use="required" />
    <xsd:attribute name="format-type" type="iso-iec19785-3-7:Registered-int" use="required" />
  </xsd:complexType>
  <xsd:simpleType name="Classification">
    <xsd:annotation>
      <xsd:documentation>The result of a classification.</xsd:documentation>
    </xsd:annotation>
    <xsd:restriction base="xsd:string" />"/>
  </xsd:simpleType>
  <xsd:simpleType name="ClassificationAlgorithmType">
    <xsd:annotation>
      <xsd:documentation>Type of classification algorithm that was used to perform the
classification.</xsd:documentation>
    </xsd:annotation>
    <xsd:restriction base="xsd:string" />"/>
  </xsd:simpleType>
  <xsd:complexType name="ClassificationData">
    <xsd:annotation>
      <xsd:documentation>Contains information on classification results and the algorithm used to determine the
classification.</xsd:documentation>
    </xsd:annotation>
    <xsd:sequence>
      <xsd:element name="Classification" type="tns:Classification" minOccurs="1" maxOccurs="1">
        <xsd:annotation>
          <xsd:documentation>The result of the classification.</xsd:documentation>
        </xsd:annotation>
      </xsd:element>
      <xsd:element name="ClassificationAlgorithmType" type="tns:ClassificationAlgorithmType" minOccurs="1"
maxOccurs="1">
        <xsd:annotation>
          <xsd:documentation>Identifies the type of classification algorithm that was used to perform the
classification.</xsd:documentation>
        </xsd:annotation>
      </xsd:element>
    </xsd:sequence>
  </xsd:complexType>
  <xsd:complexType name="EncounterListType">
    <xsd:annotation>
      <xsd:documentation>Defines a set of encounters.</xsd:documentation>
    </xsd:annotation>
    <xsd:sequence>
```

Formatted: Space Before: 4 pt, After: 4 pt, Adjust space between Latin and Asian text, Adjust space between Asian text and numbers

Formatted: English (U.S.)

Formatted: English (U.S.)

Formatted: English (U.S.)

Copyright © OASIS Open 2009-2011. All Rights Reserved.

```
        <xsd:element name="EncounterID" type="tns:BIASIDType" minOccurs="0" maxOccurs="unbounded">
          <xsd:annotation>
            <xsd:documentation>The identifier of an encounter.</xsd:documentation>
          </xsd:annotation>
        </xsd:element>
      </xsd:sequence>
    </xsd:complexType>
    <xsd:complexType name="FusionInformationListType">
      <xsd:annotation>
        <xsd:documentation>
          Contains at a minimum two sets of fusion input
          elements, as input to the PerformFusion request.
        </xsd:documentation>
      </xsd:annotation>
      <xsd:sequence>
        <xsd:element name="FusionElement" type="tns:FusionInformationType" minOccurs="2"
maxOccurs="unbounded">
          <xsd:annotation>
            <xsd:documentation>A set of fusion information.</xsd:documentation>
          </xsd:annotation>
        </xsd:element>
      </xsd:sequence>
    </xsd:complexType>
    <xsd:complexType name="FusionInformationType">
      <xsd:annotation>
        <xsd:documentation>Represents the information necessary to perform a fusion
operation.</xsd:documentation>
      </xsd:annotation>
      <xsd:sequence>
        <xsd:element name="BiometricType" type="iso-iec19785-3-7:~~Multiple types~~MultipleTypesType" minOccurs="1"
maxOccurs="1">
          <xsd:annotation>
            <xsd:documentation>The type of biological or behavioral data stored in the biometric record, as defined by
CBEFF.</xsd:documentation>
          </xsd:annotation>
        </xsd:element>
        <xsd:element name="BiometricSubType" type="iso-iec19785-3-7:~~Subtype~~SubtypeType" minOccurs="0"
maxOccurs="1">
          <xsd:annotation>
            <xsd:documentation>More specifically defines the type of biometric data stored in the biometric
record.</xsd:documentation>
```


Copyright © OASIS Open 2009-2011. All Rights Reserved.

```
        </xsd:annotation>
    </xsd:element>
    <xsd:element name="AlgorithmOwner" type="xsd:string" minOccurs="1" maxOccurs="1">
        <xsd:annotation>
            <xsd:documentation>The owner or vendor of the algorithm used to determine the score or
decision.</xsd:documentation>
        </xsd:annotation>
    </xsd:element>
    <xsd:element name="AlgorithmType" type="xsd:string" minOccurs="1" maxOccurs="1">
        <xsd:annotation>
            <xsd:documentation>The Algorithm Owner's identifier for the specific algorithm product and version used to
determine the score or decision.</xsd:documentation>
        </xsd:annotation>
    </xsd:element>
    <xsd:choice minOccurs="1" maxOccurs="1">
        <xsd:element name="FusionResult" type="tns:FusionResult" />
</xsd:sequence>
</xsd:complexType>
<xsd:complexType name="FusionResult">
<xsd:sequence />
</xsd:complexType>
<xsd:complexType name="FusionScore">
<xsd:complexContent>
<xsd:extension base="tns:FusionResult">
<xsd:sequence>
<xsd:element name="Score" type="tns:Score">
        <xsd:annotation>
            <xsd:documentation>The similarity score assigned by the matching algorithm.</xsd:documentation>
        </xsd:annotation>
    </xsd:element>
    </xsd:sequence>
</xsd:extension>
</xsd:complexContent>
</xsd:complexType>
<xsd:complexType name="FusionDecision">
<xsd:complexContent>
<xsd:extension base="tns:FusionResult">
<xsd:sequence>
<xsd:element name="Decision" type="xsd:string">
        <xsd:annotation>
```

Formatted: Space Before: 4 pt, After: 4 pt, Adjust space between Latin and Asian text, Adjust space between Asian text and numbers

Formatted: Space Before: 4 pt, After: 4 pt, Adjust space between Latin and Asian text, Adjust space between Asian text and numbers

Copyright © OASIS Open 2009-2011. All Rights Reserved.

```
1981        <xsd:documentation>The match decision assigned by the matching algorithm.</xsd:documentation>
1982      </xsd:annotation>
1983    </xsd:element>
1984    </xsd:choice>
1985  </xsd:sequence>
1986  </xsd:extension>
1987 </xsd:complexContent>
1988 </xsd:complexType>
1989  <xsd:complexType name="GenericRequestParameters">
1990    <xsd:annotation>
1991      <xsd:documentation>Common request paramters that can be used to identify the
1992 requester.</xsd:documentation>
1993    </xsd:annotation>
1994    <xsd:sequence>
1995      <xsd:element name="Application" type="tns:ApplicationIdentifier" minOccurs="0" maxOccurs="1">
1996        <xsd:annotation>
1997          <xsd:documentation>Identifies the requesting application.</xsd:documentation>
1998        </xsd:annotation>
1999      </xsd:element>
2000      <xsd:element name="ApplicationUser" type="tns:ApplicationUserIdentifier" minOccurs="0" maxOccurs="1">
2001        <xsd:annotation>
2002          <xsd:documentation>Identifers the user or instance of the requesting application.</xsd:documentation>
2003        </xsd:annotation>
2004      </xsd:element>
2005      <xsd:element name="BIASOperationName" type="xsd:string" minOccurs="0" maxOccurs="1">
2006        <xsd:annotation>
2007          <xsd:documentation>Identifers the BIAS operation name that is being requested.</xsd:documentation>
2008        </xsd:annotation>
2009      </xsd:element>
2010    </xsd:sequence>
2011  </xsd:complexType>
2012  <xsd:complexType name="InformationType">
2013    <xsd:annotation>
2014      <xsd:documentation>
2015        Allows for an unlimited number of data element types, and it does
2016        not specify nor require any particular data element.
2017      </xsd:documentation>
2018    </xsd:annotation>
2019    <xsd:sequence>
```

Formatted: Space Before: 4 pt, After: 4 pt, Adjust space between Latin and Asian text, Adjust space between Asian text and numbers

Formatted: Space Before: 4 pt, After: 4 pt, Adjust space between Latin and Asian text, Adjust space between Asian text and numbers

Copyright © OASIS Open 2009-2011. All Rights Reserved. Standards Track Work Product

```
        <xsd:any namespace="##any" processContents="lax" minOccurs="0" maxOccurs="unbounded" />"/>
    </xsd:sequence>
  </xsd:complexType>
  <xsd:complexType name="ListFilterType">
    <xsd:annotation>
      <xsd:documentation>
        Provides a method to filter the amount of information returned in
        a search of biometric data.
      </xsd:documentation>
    </xsd:annotation>
    <xsd:sequence>
      <xsd:element name="BiometricTypeFilters">
<xsd:complexType>
<xsd:sequence>
<xsd:element name="BiometricTypeFilter" type="iso-iec19785-3-7:Multiple typesMultipleTypesType" minOccurs="1"
maxOccurs="unbounded">
        <xsd:annotation>
        <xsd:documentation>Limits the returned information to a specific type of biometric, as defined by
CBEFF.</xsd:documentation>
        </xsd:annotation>
      </xsd:element>
    </xsd:sequence>
</xsd:complexType>
</xsd:element>
<xsd:element name="IncludeBiometricSubtype" type="xsd:boolean" minOccurs="1" maxOccurs="1">
        <xsd:annotation>
        <xsd:documentation>A Boolean flag indicating if biometric subtype information should be
returned.</xsd:documentation>
        </xsd:annotation>
      </xsd:element>
    </xsd:sequence>
  </xsd:complexType>
  <xsd:simpleType name="MatchType">
    <xsd:annotation>
      <xsd:documentation>The result of a fusion method.</xsd:documentation>
    </xsd:annotation>
    <xsd:restriction base="xsd:boolean" />"/>
  </xsd:simpleType>
  <xsd:complexType name="ProcessingOptionsType">
    <xsd:annotation>
```

Formatted: Space Before: 4 pt, After: 4 pt, Adjust space between Latin and Asian text, Adjust space between Asian text and numbers

Formatted: Space Before: 4 pt, After: 4 pt, Adjust space between Latin and Asian text, Adjust space between Asian text and numbers

Copyright © OASIS Open 2009-2011. All Rights Reserved.

```
        <xsd:documentation>
            BIAS aggregate services support the ability to include various
            processing options which direct and possibly control the business
            logic for that service. The ProcessingOptionsType provides a
            method to represent those options. Processing options should be
            defined by the implementing system.
        </xsd:documentation>
    </xsd:annotation>
    <xsd:sequence>
        <xsd:element name="Option" type="xsd:string" minOccurs="0" maxOccurs="unbounded">
            <xsd:annotation>
                <xsd:documentation>An option supported by the implementing system.</xsd:documentation>
            </xsd:annotation>
        </xsd:element>
    </xsd:sequence>
</xsd:complexType>
<xsd:simpleType name="ProductID">
    <xsd:annotation>
        <xsd:documentation>The vendor's ID for a particular product.</xsd:documentation>
    </xsd:annotation>
    <xsd:restriction base="xsd:string" /> "/>
</xsd:simpleType>
<xsd:complexType name="QualityData">
    <xsd:annotation>
        <xsd:documentation>Contains information about a biometric sample's quality and the algorithm used to
compute the quality.</xsd:documentation>
    </xsd:annotation>
    <xsd:sequence>
        <xsd:element name="QualityScore" type="iso-iec19785-3-7:QualityQualityType" minOccurs="0"
maxOccurs="1">
            <xsd:annotation>
                <xsd:documentation>The quality of a biometric sample.</xsd:documentation>
            </xsd:annotation>
        </xsd:element>
        <xsd:element name="AlgorithmVendor" type="tns:VendorIdentifier" minOccurs="1" maxOccurs="1">
            <xsd:annotation>
                <xsd:documentation>The vendor of the qualilty algorithm used to determine the quality
score.</xsd:documentation>
            </xsd:annotation>
        </xsd:element>
```


Copyright © OASIS Open 2009-2011. All Rights Reserved.

```
2100      <xsd:element name="AlgorithmVendorProductID" type="tns:ProductID" minOccurs="1" maxOccurs="1">
2101        <xsd:annotation>
2102          <xsd:documentation>The vendor's ID for the algorithm used to determine the quality.</xsd:documentation>
2103        </xsd:annotation>
2104      </xsd:element>
2105      <xsd:element name="AlgorithmVersion" type="tns:VersionType" minOccurs="0" maxOccurs="1">
2106        <xsd:annotation>
2107          <xsd:documentation>The version of the algorithm used to determine the quality.</xsd:documentation>
2108        </xsd:annotation>
2109      </xsd:element>
2110    </xsd:sequence>
2111  </xsd:complexType>
2112  <xsd:complexType name="RequestTemplate" abstract="true">
2113    <xsd:annotation>
2114      <xsd:documentation>Base template for BIAS primitive service requests.</xsd:documentation>
2115    </xsd:annotation>
2116    <xsd:sequence>
2117      <xsd:element name="GenericRequestParameters" type="tns:GenericRequestParameters" minOccurs="0"
2118  maxOccurs="1" />"/>
2119    </xsd:sequence>
2120  </xsd:complexType>
2121  <xsd:complexType name="ResponseStatus">
2122    <xsd:sequence>
2123      <xsd:element name="Return" type="tns:ReturnCode" minOccurs="1" maxOccurs="1">
2124        <xsd:annotation>
2125          <xsd:documentation>The return code indicates the return status of the operation.</xsd:documentation>
2126        </xsd:annotation>
2127      </xsd:element>
2128      <xsd:element name="Message" type="xsd:string" minOccurs="0" maxOccurs="1">
2129        <xsd:annotation>
2130          <xsd:documentation>A short message corresponding to the return code.</xsd:documentation>
2131        </xsd:annotation>
2132      </xsd:element>
2133    </xsd:sequence>
2134  </xsd:complexType>
2135  <xsd:complexType name="ResponseTemplate" abstract="true">
2136    <xsd:annotation>
2137      <xsd:documentation>Base template for BIAS responses.</xsd:documentation>
2138    </xsd:annotation>
```


Copyright © OASIS Open 2009-2011. All Rights Reserved. Standards Track Work Product

```
    <xsd:sequence>
      <xsd:element name="ResponseStatus" type="tns:ResponseStatus" minOccurs="1" maxOccurs="1">
        <xsd:annotation>
          <xsd:documentation>Returned status for the operation.</xsd:documentation>
        </xsd:annotation>
      </xsd:element>
    </xsd:sequence>
  </xsd:complexType>
  <xsd:simpleType name="ReturnCode">
    <xsd:annotation>
      <xsd:documentation>BIAS Operation Return Codes</xsd:documentation>
    </xsd:annotation>
    <xsd:restriction base="xsd:unsignedLong">
      <xsd:enumeration value="0">
        <xsd:annotation>
          <xsd:documentation>Success</xsd:documentation>
        </xsd:annotation>
      </xsd:enumeration>
    </xsd:restriction>
  </xsd:simpleType>
  <xsd:simpleType name="Score">
    <xsd:annotation>
      <xsd:documentation>Match result or quality score.</xsd:documentation>
    </xsd:annotation>
    <xsd:restriction base="xsd:float" /></xsd:restriction>
  </xsd:simpleType>
  <xsd:complexType name="TokenType">
    <xsd:annotation>
      <xsd:documentation>Defines a token that is returned for asynchronous processing.</xsd:documentation>
    </xsd:annotation>
    <xsd:sequence>
      <xsd:element name="TokenValue" type="xsd:string" minOccurs="1" maxOccurs="1">
        <xsd:annotation>
          <xsd:documentation>A value returned by the implementing system that is used to retrieve the results to a
service at a later time.</xsd:documentation>
        </xsd:annotation>
      </xsd:element>
      <xsd:element name="Expiration" type="xsd:date" minOccurs="1" maxOccurs="1">
        <xsd:annotation>
```

Formatted: English (U.S.)

Formatted: English (U.S.)

Copyright © OASIS Open 2009-2011. All Rights Reserved. Standards Track Work Product

```
————<xsd:documentation>A date and time at which point the token expires and the service results are no longer
guaranteed to be available.</xsd:documentation>
————</xsd:annotation>
———</xsd:element>
———</xsd:sequence>
——</xsd:complexType>
——<xsd:simpleType name="VendorIdentifier">
———<xsd:annotation>
———<xsd:documentation>Identifies a vendor.</xsd:documentation>
———</xsd:annotation>
———<xsd:restriction base="xsd:string~~" />~~"/>
——</xsd:simpleType>
——<xsd:complexType name="Version">
———<xsd:annotation>
———<xsd:documentation>
———For a description or definition of each data element, see the
———referenced CBEFF standards in the CBEFF_XML_BIR_Type schema.
———</xsd:documentation>
———</xsd:annotation>
———<xsd:sequence>
———<xsd:element name="major" type="xsd:nonNegativeInteger" minOccurs="1" maxOccurs="1~~" />~~"/>
———<xsd:element name="minor" type="xsd:nonNegativeInteger" minOccurs="1" maxOccurs="1~~" />~~"/>
———</xsd:sequence>
——</xsd:complexType>
——<xsd:simpleType name="VersionType">
———<xsd:annotation>
———<xsd:documentation>The version of a component.</xsd:documentation>
———</xsd:annotation>
———<xsd:restriction base="xsd:string~~" />~~"/>
——</xsd:simpleType>
——<xsd:element name="~~AddSubjectToGalleryRequest~~AddSubjectToGallery">
———<xsd:complexType>
———<xsd:annotation>
————<xsd:documentation>
————Register a subject to a given gallery or population group.
———</xsd:documentation>
———</xsd:annotation>
———<xsd:sequence>
<xsd:element name="AddSubjectToGalleryRequest" nillable="true">
```

Formatted: English (U.S.)

Copyright © OASIS Open 2009-2011. All Rights Reserved. Standards Track Work Product

```
<xsd:complexType>
<xsd:complexContent>
    <xsd:extension base="tns:RequestTemplate">
      <xsd:sequence>
        <xsd:element name="GalleryID" type="tns:BIASIDType" minOccurs="1" maxOccurs="1">
          <xsd:annotation>
            <xsd:documentation>The identifier of the gallery or population group to which the subject will be added.</xsd:documentation>
          </xsd:annotation>
        </xsd:element>
        <xsd:element name="Identity" type="tns:BIASIdentity" minOccurs="1" maxOccurs="1">
          <xsd:annotation>
            <xsd:documentation>The identity to add to the gallery.</xsd:documentation>
          </xsd:annotation>
        </xsd:element>
      </xsd:sequence>
    </xsd:extension>
  </xsd:complexContent>
 </xsd:complexType>
</xsd:element>
<xsd:element name="AddSubjectToGalleryResponse">
  <xsd:complexType>
    <xsd:annotation>
      <xsd:documentation>
        The response to an AddSubjectToGallery request.
      </xsd:documentation>
    </xsd:annotation>
    <xsd:sequence>
<xsd:element name="AddSubjectToGalleryResponsePackage" nillable="true">
<xsd:complexType>
<xsd:complexContent>
    <xsd:extension base="tns:ResponseTemplate" />"/>
  </xsd:complexContent>
 </xsd:complexType>
</xsd:element>
 </xsd:sequence>
```

Formatted: Space Before: 4 pt, After: 4 pt, Adjust space between Latin and Asian text, Adjust space between Asian text and numbers

Formatted: Space Before: 4 pt, After: 4 pt, Adjust space between Latin and Asian text, Adjust space between Asian text and numbers

Formatted: Space Before: 4 pt, After: 4 pt, Adjust space between Latin and Asian text, Adjust space between Asian text and numbers

Copyright © OASIS Open 2009-2011. All Rights Reserved. Standards Track Work Product

```
</xsd:complexType>
</xsd:element>
<xsd:element name="~~CheckQualityRequest~~CheckQuality">
    <xsd:complexType>
        <xsd:annotation>
            <xsd:documentation>
                Calculate a quality score for a given biometric.
            </xsd:documentation>
        </xsd:annotation>
        <xsd:sequence>
<xsd:element name="CheckQualityRequest" nillable="true">
<xsd:complexType>
<xsd:complexContent>
            <xsd:extension base="tns:RequestTemplate">
            <xsd:sequence>
            <xsd:element name="BiometricData" type="tns:BIASBiometricDataType" -minOccurs="1" maxOccurs="1">
            <xsd:annotation>
            <xsd:documentation>Data structure containing a single biometric sample for which a quality score is to be
determined.</xsd:documentation>
            </xsd:annotation>
            </xsd:element>
            <xsd:element name="Quality" type="tns:QualityData" minOccurs="0" maxOccurs="1">
            <xsd:annotation>
            <xsd:documentation>Specifies a particular algorithm vendor and vender product ID.</xsd:documentation>
            </xsd:annotation>
            </xsd:element>
            </xsd:sequence>
            </xsd:extension>
    </xsd:complexContent>
    </xsd:complexType>
</xsd:element>
    </xsd:sequence>
</xsd:complexType>
</xsd:element>
<xsd:element name="CheckQualityResponse">
    <xsd:complexType>
        <xsd:annotation>
            <xsd:documentation>
                The response to a CheckQuality request.
```

Formatted: Space Before: 4 pt, After: 4 pt, Adjust space between Latin and Asian text, Adjust space between Asian text and numbers

Formatted: Space Before: 4 pt, After: 4 pt, Adjust space between Latin and Asian text, Adjust space between Asian text and numbers

Formatted: Space Before: 4 pt, After: 4 pt, Adjust space between Latin and Asian text, Adjust space between Asian text and numbers

Copyright © OASIS Open 2009-2011. All Rights Reserved.

```
        </xsd:documentation>
      </xsd:annotation>
      <xsd:sequence>
<xsd:element name="CheckQualityResponsePackage" nillable="true">
<xsd:complexType>
<xsd:complexContent>
        <xsd:extension base="tns:ResponseTemplate">
          <xsd:sequence>
            <xsd:element name="QualityInfo" type="tns:QualityData" minOccurs="1" maxOccurs="1">
              <xsd:annotation>
                <xsd:documentation>Contains the quality information for the submitted biometric
sample.</xsd:documentation>
              </xsd:annotation>
            </xsd:element>
          </xsd:sequence>
        </xsd:extension>
      </xsd:complexContent>
    </xsd:complexType>
  </xsd:element>
  <xsd:element name="ClassifyBiometricDataRequest">
    </xsd:sequence>
</xsd:complexType>
  </xsd:element>
<xsd:element name="ClassifyBiometricData">
<xsd:complexType>
<xsd:annotation>
        <xsd:documentation>
          Classifies a biometric sample.
        </xsd:documentation>
      </xsd:annotation>
      <xsd:sequence>
<xsd:element name="ClassifyBiometricDataRequest" nillable="true">
<xsd:complexType>
<xsd:complexContent>
        <xsd:extension base="tns:RequestTemplate">
          <xsd:sequence>
            <xsd:element name="BiometricData" type="tns:BIASBiometricDataType" minOccurs="1" maxOccurs="1">
              <xsd:annotation>
                <xsd:documentation>Data structure containing a single biometric sample for which the classification is to
be determined.</xsd:documentation>
```

Formatted: Space Before: 4 pt, After: 4 pt, Adjust space between Latin and Asian text, Adjust space between Asian text and numbers

Formatted: Space Before: 4 pt, After: 4 pt, Adjust space between Latin and Asian text, Adjust space between Asian text and numbers

Formatted: Space Before: 4 pt, After: 4 pt, Adjust space between Latin and Asian text, Adjust space between Asian text and numbers

Formatted: Space Before: 4 pt, After: 4 pt, Adjust space between Latin and Asian text, Adjust space between Asian text and numbers

Copyright © OASIS Open 2009-2011. All Rights Reserved. Standards Track Work Product

```
2335          </xsd:annotation>
2336        </xsd:element>
2337      </xsd:sequence>
2338    </xsd:extension>
2339  </xsd:complexContent>
2340  </xsd:complexType>
2341  </xsd:element>
2342  </xsd:sequence>
2343 </xsd:complexType>
2344 </xsd:element>
2345 <xsd:element name="ClassifyBiometricDataResponse">
2346  <xsd:complexType>
2347  <xsd:annotation>
2348    <xsd:documentation>
2349      The response to a ClassifyBiometricData request, containing
2350      the classification of a biometric sample.
2351    </xsd:documentation>
2352  </xsd:annotation>
2353  <xsd:sequence>
2354 <xsd:element name="ClassifyBiometricDataResponsePackage" nillable="true">
2355 <xsd:complexType>
2356 <xsd:complexContent>
2357    <xsd:extension base="tns:ResponseTemplate">
2358      <xsd:sequence>
2359        <xsd:element name="ClassificationData" type="tns:ClassificationData" minOccurs="1" maxOccurs="1">
2360          <xsd:annotation>
2361            <xsd:documentation>Information on the results and type of classification
2362 performed.</xsd:documentation>
2363          </xsd:annotation>
2364        </xsd:element>
2365      </xsd:sequence>
2366    </xsd:extension>
2367  </xsd:complexContent>
2368  </xsd:complexType>
2369  </xsd:element>
2370  </xsd:sequence>
2371 </xsd:complexType>
2372 </xsd:element>
2373 <xsd:element name="CreateSubject">
```

Formatted: Space Before: 4 pt, After: 4 pt, Adjust space between Latin and Asian text, Adjust space between Asian text and numbers

Formatted: Space Before: 4 pt, After: 4 pt, Adjust space between Latin and Asian text, Adjust space between Asian text and numbers

Copyright © OASIS Open 2009-2011. All Rights Reserved.

```
<xsd:complexType>
<xsd:annotation>
<xsd:documentation>
Create a new subject record.
</xsd:documentation>
</xsd:annotation>
<xsd:sequence>
<xsd:element name="CreateSubjectRequest" nillable="true">
    <xsd:complexType>
      <xsd:annotation>
        <xsd:documentation>
          Create a new subject record.
        </xsd:documentation>
      </xsd:annotation>
      <xsd:complexContent>
        <xsd:extension base="tns:RequestTemplate" />"/>
      </xsd:complexContent>
    </xsd:complexType>
  </xsd:element>
</xsd:sequence>
</xsd:complexType>
</xsd:element>
<xsd:element name="CreateSubjectResponse">
    <xsd:complexType>
      <xsd:annotation>
        <xsd:documentation>
          The response to a CreateSubject request, containing the subject
          ID of the new subject record.
        </xsd:documentation>
      </xsd:annotation>
      <xsd:sequence>
<xsd:element name="CreateSubjectResponsePackage" nillable="true">
<xsd:complexType>
<xsd:complexContent>
        <xsd:extension base="tns:ResponseTemplate">
          <xsd:sequence>
            <xsd:element name="Identity" type="tns:BIASIdentity" minOccurs="1" maxOccurs="1">
              <xsd:annotation>
                <xsd:documentation>Contains the subject ID of the new subject record.</xsd:documentation>
              </xsd:annotation>
```

Formatted: Space Before: 4 pt, After: 4 pt, Adjust space between Latin and Asian text, Adjust space between Asian text and numbers

Formatted: Space Before: 4 pt, After: 4 pt, Adjust space between Latin and Asian text, Adjust space between Asian text and numbers

Formatted: Space Before: 4 pt, After: 4 pt, Adjust space between Latin and Asian text, Adjust space between Asian text and numbers

Formatted: Space Before: 4 pt, After: 4 pt, Adjust space between Latin and Asian text, Adjust space between Asian text and numbers

Copyright © OASIS Open 2009-2011. All Rights Reserved. Standards Track Work Product

```
————</xsd:element>
————</xsd:sequence>
———</xsd:extension>
——</xsd:complexContent>
—</xsd:complexType>
—</xsd:element>
—</xsd:sequence>
</xsd:complexType>
</xsd:element>
<xsd:element name="DeleteBiographicDataRequestDeleteBiographicData">
—<xsd:complexType>
—<xsd:annotation>
———<xsd:documentation>
————Erase all of the biographic data associated with a given
————subject record or, in the encounter-centric model, with a
————given encounter.
———</xsd:documentation>
——</xsd:annotation>
—<xsd:sequence>
<xsd:element name="DeleteBiographicDataRequest" nillable="true">
<xsd:complexType>
<xsd:complexContent>
———<xsd:extension base="tns:RequestTemplate">
————<xsd:sequence>
————<xsd:element name="Identity" type="tns:BIASIdentity" minOccurs="1" maxOccurs="1">
—————<xsd:annotation>
—————<xsd:documentation>Contains either the subject ID or encounter ID reference.</xsd:documentation>
—————</xsd:annotation>
————</xsd:element>
————</xsd:sequence>
———</xsd:extension>
——</xsd:complexContent>
—</xsd:complexType>
—</xsd:element>
—</xsd:sequence>
</xsd:complexType>
</xsd:element>
<xsd:element name="DeleteBiographicDataResponse">
—<xsd:complexType>
```

Formatted: Space Before: 4 pt, After: 4 pt, Adjust space between Latin and Asian text, Adjust space between Asian text and numbers

Formatted: Space Before: 4 pt, After: 4 pt, Adjust space between Latin and Asian text, Adjust space between Asian text and numbers

Formatted: Space Before: 4 pt, After: 4 pt, Adjust space between Latin and Asian text, Adjust space between Asian text and numbers

Copyright © OASIS Open 2009-2011. All Rights Reserved.

```
———<xsd:annotation>
———<xsd:documentation>
———The response to a DeleteBiographicData request.
———</xsd:documentation>
———</xsd:annotation>
———<xsd:sequence>
<xsd:element name="DeleteBiographicDataResponsePackage" nillable="true">
<xsd:complexType>
<xsd:complexContent>
———<xsd:extension base="tns:ResponseTemplate" />"/>
———</xsd:complexContent>
———</xsd:complexType>
——</xsd:element>
——</xsd:sequence>
</xsd:complexType>
</xsd:element>
<xsd:element name="DeleteBiometricDataRequestDeleteBiometricData">
———<xsd:complexType>
———<xsd:annotation>
———<xsd:documentation>
———Erase all of the biometric data associated with a given
———subject record or, in the encounter-centric model, with a
———given encounter.
———</xsd:documentation>
———</xsd:annotation>
———<xsd:sequence>
<xsd:element name="DeleteBiometricDataRequest" nillable="true">
<xsd:complexType>
<xsd:complexContent>
———<xsd:extension base="tns:RequestTemplate">
———<xsd:sequence>
———<xsd:element name="Identity" type="tns:BIASIdentity" minOccurs="1" maxOccurs="1">
————<xsd:annotation>
————<xsd:documentation>Contains either the subject ID or encounter ID reference.</xsd:documentation>
———</xsd:annotation>
———</xsd:element>
———</xsd:sequence>
———</xsd:extension>
———</xsd:complexContent>
```

Formatted: Space Before: 4 pt, After: 4 pt, Adjust space between Latin and Asian text, Adjust space between Asian text and numbers

Formatted: Space Before: 4 pt, After: 4 pt, Adjust space between Latin and Asian text, Adjust space between Asian text and numbers

Formatted: Space Before: 4 pt, After: 4 pt, Adjust space between Latin and Asian text, Adjust space between Asian text and numbers

Copyright © OASIS Open 2009-2011. All Rights Reserved.

```
        </xsd:complexType>
      </xsd:element>
    </xsd:sequence>
  </xsd:complexType>
</xsd:element>
<xsd:element name="DeleteBiometricDataResponse">
    <xsd:complexType>
      <xsd:annotation>
        <xsd:documentation>
          The response to a DeleteBiometricData request.
        </xsd:documentation>
      </xsd:annotation>
      <xsd:sequence>
<xsd:element name="DeleteBiometricDataResponsePackage" nillable="true">
<xsd:complexType>
<xsd:complexContent>
        <xsd:extension base="tns:ResponseTemplate" />"/>
      </xsd:complexContent>
    </xsd:complexType>
  </xsd:element>
</xsd:sequence>
</xsd:complexType>
</xsd:element>
<xsd:element name="DeleteSubjectRequestDeleteSubject">
    <xsd:complexType>
      <xsd:annotation>
        <xsd:documentation>
          Delete an existing subject record and, in an encounter-centric
          model, any associated encounter information.
        </xsd:documentation>
      </xsd:annotation>
      <xsd:sequence>
<xsd:element name="DeleteSubjectRequest" nillable="true">
<xsd:complexType>
<xsd:complexContent>
        <xsd:extension base="tns:RequestTemplate">
          <xsd:sequence>
            <xsd:element name="Identity" type="tns:BIASIdentity" minOccurs="1" maxOccurs="1">
              <xsd:annotation>
```

Formatted: Space Before: 4 pt, After: 4 pt, Adjust space between Latin and Asian text, Adjust space between Asian text and numbers

Formatted: Space Before: 4 pt, After: 4 pt, Adjust space between Latin and Asian text, Adjust space between Asian text and numbers

Formatted: Space Before: 4 pt, After: 4 pt, Adjust space between Latin and Asian text, Adjust space between Asian text and numbers

Formatted: Space Before: 4 pt, After: 4 pt, Adjust space between Latin and Asian text, Adjust space between Asian text and numbers

Copyright © OASIS Open 2009-2011. All Rights Reserved. Standards Track Work Product

```
2531        <xsd:documentation>Subject ID of the identity to delete.</xsd:documentation>
2532      </xsd:annotation>
2533    </xsd:element>
2534  </xsd:sequence>
2535  </xsd:extension>
2536 </xsd:complexContent>
2537 </xsd:complexType>
2538 </xsd:element>
2539 </xsd:sequence>
2540 </xsd:complexType>
2541 </xsd:element>
2542 <xsd:element name="DeleteSubjectResponse">
2543 <xsd:complexType>
2544 <xsd:annotation>
2545 <xsd:documentation>
2546 The response to a DeleteSubject request.
2547 </xsd:documentation>
2548 </xsd:annotation>
2549 <xsd:sequence>
2550 <xsd:element name="DeleteSubjectResponsePackage" nillable="true">
2551 <xsd:complexType>
2552 <xsd:complexContent>
2553 <xsd:extension base="tns:ResponseTemplate" />"/>
2554 </xsd:complexContent>
2555 </xsd:complexType>
2556 </xsd:element>
2557 </xsd:sequence>
2558 </xsd:complexType>
2559 </xsd:element>
2560 <xsd:element name="DeleteSubjectFromGalleryRequestDeleteSubjectFromGallery">
2561 <xsd:complexType>
2562 <xsd:annotation>
2563 <xsd:documentation>
2564 Remove the registration of a subject from a gallery or
2565 population group.
2566 </xsd:documentation>
2567 </xsd:annotation>
2568 <xsd:sequence>
2569 <xsd:element name="DeleteSubjectFromGalleryRequest" nillable="true">
```

Formatted: Space Before: 4 pt, After: 4 pt, Adjust space between Latin and Asian text, Adjust space between Asian text and numbers

Formatted: Space Before: 4 pt, After: 4 pt, Adjust space between Latin and Asian text, Adjust space between Asian text and numbers

Formatted: Space Before: 4 pt, After: 4 pt, Adjust space between Latin and Asian text, Adjust space between Asian text and numbers

Copyright © OASIS Open 2009-2011. All Rights Reserved.

```
<xsd:complexType>
<xsd:complexContent>
    <xsd:extension base="tns:RequestTemplate">
      <xsd:sequence>
        <xsd:element name="GalleryID" type="tns:BIASIDType" minOccurs="1" maxOccurs="1">
          <xsd:annotation>
            <xsd:documentation>The identifier of the gallery or population group from which the subject will be deleted.</xsd:documentation>
          </xsd:annotation>
        </xsd:element>
        <xsd:element name="Identity" type="tns:BIASIdentity" minOccurs="1" maxOccurs="1">
          <xsd:annotation>
            <xsd:documentation>The identity to remove from the gallery.</xsd:documentation>
          </xsd:annotation>
        </xsd:element>
      </xsd:sequence>
    </xsd:extension>
  </xsd:complexContent>
 </xsd:complexType>
</xsd:element>
<xsd:element name="DeleteSubjectFromGalleryResponse">
  <xsd:complexType>
    <xsd:annotation>
      <xsd:documentation>
        The response to a DeleteSubjectFromGallery request.
      </xsd:documentation>
    </xsd:annotation>
    <xsd:sequence>
<xsd:element name="DeleteSubjectFromGalleryResponsePackage" nillable="true">
<xsd:complexType>
<xsd:complexContent>
    <xsd:extension base="tns:ResponseTemplate" />"/>
  </xsd:complexContent>
 </xsd:complexType>
</xsd:element>
  </xsd:sequence>
```

Formatted: Space Before: 4 pt, After: 4 pt, Adjust space between Latin and Asian text, Adjust space between Asian text and numbers

Formatted: Space Before: 4 pt, After: 4 pt, Adjust space between Latin and Asian text, Adjust space between Asian text and numbers

Formatted: Space Before: 4 pt, After: 4 pt, Adjust space between Latin and Asian text, Adjust space between Asian text and numbers

Copyright © OASIS Open 2009-2011. All Rights Reserved. Standards Track Work Product

```
</xsd:complexType>
</xsd:element>
<xsd:element name="~~GetIdentifySubjectResultsRequest~~GetIdentifySubjectResults">
    <xsd:complexType>
        <xsd:annotation>
            <xsd:documentation>
                Retrieve the identification results for a specified token,
                which was returned by the Identify Subject service.
            </xsd:documentation>
        </xsd:annotation>
        <xsd:sequence>
<xsd:element name="GetIdentifySubjectResultsRequest" nillable="true">
<xsd:complexType>
<xsd:complexContent>
            <xsd:extension base="tns:RequestTemplate">
                <xsd:sequence>
                    <xsd:element name="Token" type="tns:TokenType" minOccurs="1" maxOccurs="1">
                        <xsd:annotation>
                            <xsd:documentation>A value used to retrieve the results of an IdentifySubject
request.</xsd:documentation>
                        </xsd:annotation>
                    </xsd:element>
                </xsd:sequence>
            </xsd:extension>
        </xsd:complexContent>
    </xsd:complexType>
</xsd:element>
    </xsd:sequence>
</xsd:complexType>
</xsd:element>
<xsd:element name="GetIdentifySubjectResultsResponse">
    <xsd:complexType>
        <xsd:annotation>
            <xsd:documentation>
                The response to a GetIdentifySubjectResults request, which includes a candidate list.
            </xsd:documentation>
        </xsd:annotation>
        <xsd:sequence>
<xsd:element name="GetIdentifySubjectResultsResponsePackage" nillable="true">
```

Formatted: Space Before: 4 pt, After: 4 pt, Adjust space between Latin and Asian text, Adjust space between Asian text and numbers

Formatted: Space Before: 4 pt, After: 4 pt, Adjust space between Latin and Asian text, Adjust space between Asian text and numbers

Formatted: Space Before: 4 pt, After: 4 pt, Adjust space between Latin and Asian text, Adjust space between Asian text and numbers

Copyright © OASIS Open 2009-2011. All Rights Reserved.

```
<xsd:complexType>
<xsd:complexContent>
    <xsd:extension base="tns:ResponseTemplate">
      <xsd:sequence>
        <xsd:element name="CandidateList" type="tns:CandidateListType" minOccurs="1" maxOccurs="1">
          <xsd:annotation>
            <xsd:documentation>A rank-ordered list of candidates that have a likelihood of matching the input biometric sample.</xsd:documentation>
          </xsd:annotation>
        </xsd:element>
      </xsd:sequence>
    </xsd:extension>
  </xsd:complexContent>
 </xsd:complexType>
</xsd:element>
<xsd:element name="IdentifySubject">
<xsd:complexType>
<xsd:annotation>
    <xsd:documentation>
    Perform an identification search against a given gallery for
    a given biometric.
    </xsd:documentation>
  </xsd:annotation>
  <xsd:sequence>
<xsd:element name="IdentifySubjectRequest" nillable="true">
<xsd:complexType>
<xsd:complexContent>
    <xsd:extension base="tns:RequestTemplate">
      <xsd:sequence>
        <xsd:element name="GalleryID" type="tns:BIASIDType" minOccurs="1" maxOccurs="1">
          <xsd:annotation>
            <xsd:documentation>The identifier of the gallery or population group which will be searched.</xsd:documentation>
          </xsd:annotation>
        </xsd:element>
        <xsd:element name="Identity" type="tns:BIASIdentity" minOccurs="1" maxOccurs="1">
```

Formatted: Space Before: 4 pt, After: 4 pt, Adjust space between Latin and Asian text, Adjust space between Asian text and numbers

Formatted: Space Before: 4 pt, After: 4 pt, Adjust space between Latin and Asian text, Adjust space between Asian text and numbers

Formatted: Space Before: 4 pt, After: 4 pt, Adjust space between Latin and Asian text, Adjust space between Asian text and numbers

Formatted: Space Before: 4 pt, After: 4 pt, Adjust space between Latin and Asian text, Adjust space between Asian text and numbers

Copyright © OASIS Open 2009-2011. All Rights Reserved. Standards Track Work Product

```
        <xsd:annotation>
          <xsd:documentation>Contains the BIR, a data structure containing the biometric sample for the search.</xsd:documentation>
        </xsd:annotation>
      </xsd:element>
      <xsd:element name="MaxListSize" type="xsd:positiveInteger" minOccurs="1" maxOccurs="1">
        <xsd:annotation>
          <xsd:documentation>The maximum size of the candidate list that should be returned.</xsd:documentation>
        </xsd:annotation>
      </xsd:element>
    </xsd:sequence>
  </xsd:extension>
 </xsd:complexContent>
</xsd:complexType>
</xsd:element>
<xsd:element name="IdentifySubjectResponse">
 <xsd:complexType>
  <xsd:annotation>
   <xsd:documentation>
    The response to an IdentifySubject request, returning a
    rank-ordered candidate list.
   </xsd:documentation>
  </xsd:annotation>
  <xsd:sequence>
<xsd:element name="IdentifySubjectResponsePackage" nillable="true">
<xsd:complexType>
<xsd:complexContent>
  <xsd:extension base="tns:ResponseTemplate">
    <xsd:choice minOccurs="1" maxOccurs="1">
    <xsd:sequence>
<xsd:element name="IdentifySubjectResult" type="tns:IdentifySubjectResultType" />
</xsd:sequence>
</xsd:extension>
</xsd:complexContent>
</xsd:complexType>
</xsd:element>
```

Formatted: Space Before: 4 pt, After: 4 pt, Adjust space between Latin and Asian text, Adjust space between Asian text and numbers

Formatted: Space Before: 4 pt, After: 4 pt, Adjust space between Latin and Asian text, Adjust space between Asian text and numbers

Copyright © OASIS Open 2009-2011. All Rights Reserved.

```
</xsd:sequence>
</xsd:complexType>
</xsd:element>
<xsd:complexType name="IdentifySubjectResultType">
<xsd:sequence />
</xsd:complexType>
<xsd:complexType name="CandidateListResultType">
<xsd:complexContent>
<xsd:extension base="tns:IdentifySubjectResultType">
<xsd:sequence>
<xsd:element name="CandidateList" type="tns:CandidateListType">
        <xsd:annotation>
        <xsd:documentation>A rank-ordered list of candidates that have a likelihood of matching the input
biometric sample; returned with successful synchronous request processing.</xsd:documentation>
        </xsd:annotation>
        </xsd:element>
        </xsd:sequence>
</xsd:extension>
</xsd:complexContent>
</xsd:complexType>
<xsd:complexType name="TokenResultType">
<xsd:complexContent>
<xsd:extension base="tns:IdentifySubjectResultType">
<xsd:sequence>
<xsd:element name="Token" type="tns:TokenType">
        <xsd:annotation>
        <xsd:documentation>A token used to retrieve the results of the IdentifySubject request; returned with
asynchronous request processing.</xsd:documentation>
        </xsd:annotation>
        </xsd:element>
        </xsd:choicesequence>
    </xsd:extension>
  </xsd:complexContent>
 </xsd:complexType>
 </xsd:element>
 <xsd:element name="ListBiographicDataRequestListBiographicData">
 <xsd:complexType>
  <xsd:annotation>
   <xsd:documentation>
    Lists the biographic data elements stored for a subject.
```

Formatted: Space Before: 4 pt, After: 4 pt, Adjust space between Latin and Asian text, Adjust space between Asian text and numbers

Formatted: Space Before: 4 pt, After: 4 pt, Adjust space between Latin and Asian text, Adjust space between Asian text and numbers

Formatted: Space Before: 4 pt, After: 4 pt, Adjust space between Latin and Asian text, Adjust space between Asian text and numbers

Copyright © OASIS Open 2009-2011. All Rights Reserved. Standards Track Work Product

```
        </xsd:documentation>
      </xsd:annotation>
      <xsd:sequence>
<xsd:element name="ListBiographicDataRequest" nillable="true">
<xsd:complexType>
<xsd:complexContent>
        <xsd:extension base="tns:RequestTemplate">
          <xsd:sequence>
            <xsd:element name="Identity" type="tns:BIASIdentity" minOccurs="1" maxOccurs="1">
              <xsd:annotation>
                <xsd:documentation>Identifies the subject or, in the encounter-centric model, a subject and an
encounter.</xsd:documentation>
              </xsd:annotation>
            </xsd:element>
          </xsd:sequence>
        </xsd:extension>
      </xsd:complexContent>
    </xsd:complexType>
  </xsd:element>
  </xsd:sequence>
</xsd:complexType>
</xsd:element>
<xsd:element name="ListBiographicDataResponse">
  <xsd:complexType>
    <xsd:annotation>
      <xsd:documentation>
        The response to a ListBiographicData request, containing a list
        of biographic data elements stored for a subject.  In the
        encounter-centric model, the biographic data elements for a
        specific encounter are returned.  If an encounter ID is not
        specified and encounter data exists for the subject, the list
        of encounter IDs which contain biographic data is returned.
      </xsd:documentation>
    </xsd:annotation>
    <xsd:sequence>
<xsd:element name="ListBiographicDataResponsePackage" nillable="true">
<xsd:complexType>
<xsd:complexContent>
        <xsd:extension base="tns:ResponseTemplate">
```

Formatted: Space Before: 4 pt, After: 4 pt, Adjust space between Latin and Asian text, Adjust space between Asian text and numbers

Formatted: Space Before: 4 pt, After: 4 pt, Adjust space between Latin and Asian text, Adjust space between Asian text and numbers

Formatted: Space Before: 4 pt, After: 4 pt, Adjust space between Latin and Asian text, Adjust space between Asian text and numbers

Copyright © OASIS Open 2009-2011. All Rights Reserved. Standards Track Work Product

```
2807        <xsd:sequence>
2808          <xsd:element name="Identity" type="tns:BIASIdentity" minOccurs="0" maxOccurs="1">
2809            <xsd:annotation>
2810              <xsd:documentation>
2811                Contains a list of biographic data elements associated with a
2812                subject or encounter; non-empty if the service was
2813                successful, biographic data exists, and either (a) the
2814                person-centric model is being used or (b) the
2815                encounter-centric model is being used and an encounter
2816                identifier was specified.
2817              </xsd:documentation>
2818            </xsd:annotation>
2819          </xsd:element>
2820          <xsd:element name="EncounterList" type="tns:EncounterListType" minOccurs="0" maxOccurs="1">
2821            <xsd:annotation>
2822              <xsd:documentation>
2823                A list of encounter ID's associated with a subject and
2824                which contain biographic data; non-empty if the service
2825                was successful, biographic data exists, the
2826                encounter-centric model is being used, and an encounter
2827                identifier was not specified.
2828              </xsd:documentation>
2829            </xsd:annotation>
2830          </xsd:element>
2831        </xsd:sequence>
2832      </xsd:extension>
2833    </xsd:complexContent>
2834  </xsd:complexType>
2835 </xsd:element>
2836 </xsd:sequence>
2837 </xsd:complexType>
2838 </xsd:element>
2839 <xsd:element name="~~ListBiometricDataRequest~~ListBiometricData">
2840   <xsd:complexType>
2841     <xsd:annotation>
2842       <xsd:documentation>
2843         Lists the biometric data elements stored for a subject. Note
2844         that no actual biometric data is returned by this service (see
2845         the RetrieveBiometricInformation service to obtain the biometric
```

Formatted: Space Before: 4 pt, After: 4 pt, Adjust space between Latin and Asian text, Adjust space between Asian text and numbers

Copyright © OASIS Open 2009-2011. All Rights Reserved.

```
        data).
      </xsd:documentation>
    </xsd:annotation>
    <xsd:sequence>
<xsd:element name="ListBiometricDataRequest" nillable="true">
<xsd:complexType>
<xsd:complexContent>
      <xsd:extension base="tns:RequestTemplate">
        <xsd:sequence>
          <xsd:element name="Identity" type="tns:BIASIdentity" minOccurs="1" maxOccurs="1">
            <xsd:annotation>
              <xsd:documentation>Identifies the subject or, in the encounter-centric model, a subject and an
encounter.</xsd:documentation>
            </xsd:annotation>
          </xsd:element>
          <xsd:element name="ListFilter" type="tns:ListFilterType" minOccurs="0" maxOccurs="1">
            <xsd:annotation>
              <xsd:documentation>Indicates what biometric information should be returned.</xsd:documentation>
            </xsd:annotation>
          </xsd:element>
        </xsd:sequence>
      </xsd:extension>
    </xsd:complexContent>
  </xsd:complexType>
</xsd:element>
</xsd:sequence>
</xsd:complexType>
</xsd:element>
<xsd:element name="ListBiometricDataResponse">
  <xsd:complexType>
    <xsd:annotation>
      <xsd:documentation>
        The response to a ListBiometricData request, containing a list
        of biometric data elements stored for a subject.  In the
        encounter-centric model, the biometric data elements for a
        specific encounter are returned.  If an encounter ID is not
        specified and encounter data exists for the subject, the list
        of encounter IDs which contain biometric data is returned.
      </xsd:documentation>
```

Formatted: Space Before: 4 pt, After: 4 pt, Adjust space between Latin and Asian text, Adjust space between Asian text and numbers

Formatted: Space Before: 4 pt, After: 4 pt, Adjust space between Latin and Asian text, Adjust space between Asian text and numbers

Copyright © OASIS Open 2009-2011. All Rights Reserved. Standards Track Work Product

```
        </xsd:annotation>
        <xsd:sequence>
<xsd:element name="ListBiometricDataResponsePackage" nillable="true">
<xsd:complexType>
<xsd:complexContent>
          <xsd:extension base="tns:ResponseTemplate">
            <xsd:sequence>
              <xsd:element name="Identity" type="tns:BIASIdentity">
                <xsd:annotation>
                  <xsd:documentation>
                    Includes a list of biometric data elements associated
                    with a subject or encounter or a list of encounter ID's
                    associated with a subject and which contain biometric
                    data.
                  </xsd:documentation>
                </xsd:annotation>
              </xsd:element>
            </xsd:sequence>
          </xsd:extension>
        </xsd:complexContent>
      </xsd:complexType>
    </xsd:element>
  </xsd:sequence>
</xsd:complexType>
</xsd:element>
<xsd:element name="PerformFusionRequestPerformFusion">
  <xsd:complexType>
    <xsd:annotation>
      <xsd:documentation>
        Accepts either match score or match decision information and creates a fused match result.
      </xsd:documentation>
    </xsd:annotation>
    <xsd:sequence>
<xsd:element name="PerformFusionRequest" nillable="true">
<xsd:complexType>
<xsd:complexContent>
      <xsd:extension base="tns:RequestTemplate">
        <xsd:sequence>
          <xsd:element name="FusionInput" type="tns:FusionInformationListType" minOccurs="1" maxOccurs="1">
```

Formatted: Space Before: 4 pt, After: 4 pt, Adjust space between Latin and Asian text, Adjust space between Asian text and numbers

Formatted: Space Before: 4 pt, After: 4 pt, Adjust space between Latin and Asian text, Adjust space between Asian text and numbers

Formatted: Space Before: 4 pt, After: 4 pt, Adjust space between Latin and Asian text, Adjust space between Asian text and numbers

Copyright © OASIS Open 2009-2011. All Rights Reserved.

```
2924          <xsd:annotation>
2925            <xsd:documentation>Score or decision input information to the fusion method.</xsd:documentation>
2926          </xsd:annotation>
2927        </xsd:element>
2928      </xsd:sequence>
2929    </xsd:extension>
2930  </xsd:complexContent>
2931 </xsd:complexType>
2932 </xsd:element>
2933 </xsd:sequence>
2934 </xsd:complexType>
2935 </xsd:element>
2936 <xsd:element name="PerformFusionResponse">
2937   <xsd:complexType>
2938     <xsd:annotation>
2939       <xsd:documentation>
2940         The response to the PerformFusion request.
2941       </xsd:documentation>
2942     </xsd:annotation>
2943     <xsd:sequence>
2944 <xsd:element name="PerformFusionResponsePackage" nillable="true">
2945 <xsd:complexType>
2946 <xsd:complexContent>
2947       <xsd:extension base="tns:ResponseTemplate">
2948         <xsd:sequence>
2949           <xsd:element name="Match" type="tns:MatchType" minOccurs="1" maxOccurs="1">
2950             <xsd:annotation>
2951               <xsd:documentation>Indicates the result of the fusion method</xsd:documentation>
2952             </xsd:annotation>
2953           </xsd:element>
2954         </xsd:sequence>
2955       </xsd:extension>
2956     </xsd:complexContent>
2957   </xsd:complexType>
2958 </xsd:element>
2959 </xsd:sequence>
2960 </xsd:complexType>
2961 </xsd:element>
2962 <xsd:element name="QueryCapabilitiesRequestQueryCapabilities">
```

Formatted: Space Before: 4 pt, After: 4 pt, Adjust space between Latin and Asian text, Adjust space between Asian text and numbers

Formatted: Space Before: 4 pt, After: 4 pt, Adjust space between Latin and Asian text, Adjust space between Asian text and numbers

Formatted: Space Before: 4 pt, After: 4 pt, Adjust space between Latin and Asian text, Adjust space between Asian text and numbers

Copyright © OASIS Open 2009-2011. All Rights Reserved. Standards Track Work Product

```
    <xsd:complexType>
      <xsd:annotation>
        <xsd:documentation>
          Returns a list of the capabilities, options, galleries, etc.
          that are supported by the BIAS implementation.
        </xsd:documentation>
      </xsd:annotation>
      <xsd:sequence>
<xsd:element name="QueryCapabilitiesRequest" nillable="true">
<xsd:complexType>
<xsd:complexContent>
        <xsd:extension base="tns:RequestTemplate" />"/>
      </xsd:complexContent>
    </xsd:complexType>
  </xsd:element>
  </xsd:sequence>
</xsd:complexType>
</xsd:element>
<xsd:element name="QueryCapabilitiesResponse">
    <xsd:complexType>
      <xsd:annotation>
        <xsd:documentation>
          The response to a QueryCapabilities request.
        </xsd:documentation>
      </xsd:annotation>
      <xsd:sequence>
<xsd:element name="QueryCapabilitiesResponsePackage" nillable="true">
<xsd:complexType>
<xsd:complexContent>
        <xsd:extension base="tns:ResponseTemplate">
          <xsd:sequence>
            <xsd:element name="CapabilityList" type="tns:CapabilityListType" minOccurs="1" maxOccurs="1">
              <xsd:annotation>
                <xsd:documentation>A list of capabilities supported by the BIAS implementation.</xsd:documentation>
              </xsd:annotation>
            </xsd:element>
          </xsd:sequence>
        </xsd:extension>
      </xsd:complexContent>
```

Formatted: Space Before: 4 pt, After: 4 pt, Adjust space between Latin and Asian text, Adjust space between Asian text and numbers

Formatted: Space Before: 4 pt, After: 4 pt, Adjust space between Latin and Asian text, Adjust space between Asian text and numbers

Formatted: Space Before: 4 pt, After: 4 pt, Adjust space between Latin and Asian text, Adjust space between Asian text and numbers

Copyright © OASIS Open 2009-2011. All Rights Reserved. Standards Track Work Product

```
    </xsd:complexType>
  </xsd:element>
  </xsd:sequence>
</xsd:complexType>
</xsd:element>
<xsd:element name="RetrieveBiographicInformationRequestRetrieveBiographicInformation">
    <xsd:complexType>
      <xsd:annotation>
        <xsd:documentation>
          Retrieves the biographic data associated with a subject ID.
        </xsd:documentation>
      </xsd:annotation>
      <xsd:sequence>
<xsd:element name="RetrieveBiographicInformationRequest" nillable="true">
<xsd:complexType>
<xsd:complexContent>
        <xsd:extension base="tns:RequestTemplate">
          <xsd:sequence>
            <xsd:element name="Identity" type="tns:BIASIdentity" minOccurs="1" maxOccurs="1">
              <xsd:annotation>
                <xsd:documentation>Identifies the subject or, in the encounter-centric model, a subject and an
encounter.</xsd:documentation>
              </xsd:annotation>
            </xsd:element>
          </xsd:sequence>
        </xsd:extension>
      </xsd:complexContent>
    </xsd:complexType>
  </xsd:element>
  </xsd:sequence>
</xsd:complexType>
</xsd:element>
<xsd:element name="RetrieveBiographicInformationResponse">
    <xsd:complexType>
      <xsd:annotation>
        <xsd:documentation>
          The response to a RetrieveBiographicInformation request,
          containing the biographic data associated with a subject ID. In
          the encounter-centric model, the biographic data associated with
```

Formatted: Space Before: 4 pt, After: 4 pt, Adjust space between Latin and Asian text, Adjust space between Asian text and numbers

Formatted: Space Before: 4 pt, After: 4 pt, Adjust space between Latin and Asian text, Adjust space between Asian text and numbers

Formatted: Space Before: 4 pt, After: 4 pt, Adjust space between Latin and Asian text, Adjust space between Asian text and numbers

Copyright © OASIS Open 2009-2011. All Rights Reserved.

```
3041        a specified encounter is returned. If the encounter ID is not
3042        specified in the encounter-centric model, the biographic
3043        information associated with the most recent encounter is returned.
3044      </xsd:documentation>
3045    </xsd:annotation>
3046    <xsd:sequence>
3047  <xsd:element name="RetrieveBiographicInformationResponsePackage" nillable="true">
3048  <xsd:complexType>
3049  <xsd:complexContent>
3050      <xsd:extension base="tns:ResponseTemplate">
3051        <xsd:sequence>
3052          <xsd:element name="Identity" type="tns:BIASIdentity" minOccurs="1" maxOccurs="1">
3053            <xsd:annotation>
3054              <xsd:documentation>Includes the set of biographic data associated with a subject.</xsd:documentation>
3055            </xsd:annotation>
3056          </xsd:element>
3057        </xsd:sequence>
3058      </xsd:extension>
3059    </xsd:complexContent>
3060  </xsd:complexType>
3061  </xsd:element>
3062    <xsd:element name="RetrieveBiometricInformationRequest">
3063    <</xsd:sequence>
3064  </xsd:complexType>
3065    </xsd:element>
3066  <xsd:element name="RetrieveBiometricInformation">
3067  <xsd:complexType>
3068  <xsd:annotation>
3069      <xsd:documentation>
3070        Retrieves the biometric data associated with a subject ID.
3071      </xsd:documentation>
3072    </xsd:annotation>
3073    <xsd:sequence>
3074  <xsd:element name="RetrieveBiometricInformationRequest" nillable="true">
3075  <xsd:complexType>
3076  <xsd:complexContent>
3077      <xsd:extension base="tns:RequestTemplate">
3078        <xsd:sequence>
3079          <xsd:element name="Identity" type="tns:BIASIdentity" minOccurs="1" maxOccurs="1">
```

Formatted: Space Before: 4 pt, After: 4 pt, Adjust space between Latin and Asian text, Adjust space between Asian text and numbers

Formatted: Space Before: 4 pt, After: 4 pt, Adjust space between Latin and Asian text, Adjust space between Asian text and numbers

Formatted: Space Before: 4 pt, After: 4 pt, Adjust space between Latin and Asian text, Adjust space between Asian text and numbers

Formatted: Space Before: 4 pt, After: 4 pt, Adjust space between Latin and Asian text, Adjust space between Asian text and numbers

Copyright © OASIS Open 2009-2011. All Rights Reserved. Standards Track Work Product

```
3080        <xsd:annotation>
3081            <xsd:documentation>Identifies the subject or, in the encounter-centric model, a subject and an
3082        encounter.</xsd:documentation>
3083        </xsd:annotation>
3084    </xsd:element>
3085    <xsd:element name="BiometricType" type="iso-iec19785-3-7:Multiple-typesMultipleTypesType"
3086        minOccurs="0" maxOccurs="1">
3087        <xsd:annotation>
3088            <xsd:documentation>The type of biological or behavioral data to retrieve.</xsd:documentation>
3089        </xsd:annotation>
3090    </xsd:element>
3091    </xsd:sequence>
3092  </xsd:extension>
3093  </xsd:complexContent>
3094 </xsd:complexType>
3095 </xsd:element>
3096 </xsd:sequence>
3097 </xsd:complexType>
3098 </xsd:element>
3099 <xsd:element name="RetrieveBiometricInformationResponse">
3100     <xsd:complexType>
3101         <xsd:annotation>
3102             <xsd:documentation>
3103                 The response to a RetrieveBiometricInformation request,
3104                 containing the biometric data associated with a subject ID. In
3105                 the encounter-centric model, the biometric data associated with
3106                 a specified encounter is returned. If the encounter ID is not
3107                 specified in the encounter-centric model, the biometric
3108                 information associated with the most recent encounter is returned.
3109             </xsd:documentation>
3110         </xsd:annotation>
3111         <xsd:sequence>
3112 <xsd:element name="RetrieveBiometricInformationResponsePackage" nillable="true">
3113 <xsd:complexType>
3114 <xsd:complexContent>
3115   <xsd:extension base="tns:ResponseTemplate">
3116     <xsd:sequence>
3117       <xsd:element name="Identity" type="tns:BIASIdentity" minOccurs="1" maxOccurs="1">
3118         <xsd:annotation>
3119           <xsd:documentation>Includes the biometric data associated with a subject.</xsd:documentation>
```

Formatted: Space Before: 4 pt, After: 4 pt, Adjust space between Latin and Asian text, Adjust space between Asian text and numbers

Formatted: Space Before: 4 pt, After: 4 pt, Adjust space between Latin and Asian text, Adjust space between Asian text and numbers

Copyright © OASIS Open 2009-2011. All Rights Reserved. Standards Track Work Product

```
3120 ————</xsd:annotation>
3121 ————</xsd:element>
3122 ————</xsd:sequence>
3123 ———</xsd:extension>
3124 ——</xsd:complexContent>
3125 ——</xsd:complexType>
3126 —</xsd:element>
3127 —</xsd:sequence>
3128 </xsd:complexType>
3129 </xsd:element>
3130 <xsd:element name="SetBiographicDataRequestSetBiographicData">
3131 ——<xsd:complexType>
3132 ——<xsd:annotation>
3133 ———<xsd:documentation>
3134 ————Associates biographic data to a given subject record.
3135 ———</xsd:documentation>
3136 ——</xsd:annotation>
3137 ——<xsd:sequence>
3138 <xsd:element name="SetBiographicDataRequest" nillable="true">
3139 <xsd:complexType>
3140 <xsd:complexContent>
3141 ———<xsd:extension base="tns:RequestTemplate">
3142 ————<xsd:sequence>
3143 ————<xsd:element name="Identity" type="tns:BIASIdentity" minOccurs="1" maxOccurs="1">
3144 ————<xsd:annotation>
3145 ————<xsd:documentation>Identifies the subject or, in the encounter-centric model, a subject and an encounter,
3146 and includes the biographic data to store.</xsd:documentation>
3147 ————</xsd:annotation>
3148 ————</xsd:element>
3149 ————</xsd:sequence>
3150 ———</xsd:extension>
3151 ——</xsd:complexContent>
3152 ——</xsd:complexType>
3153 —</xsd:element>
3154 —</xsd:sequence>
3155 </xsd:complexType>
3156 </xsd:element>
3157 <xsd:element name="SetBiographicDataResponse">
3158 ——<xsd:complexType>
```

Formatted: Space Before: 4 pt, After: 4 pt, Adjust space between Latin and Asian text, Adjust space between Asian text and numbers

Formatted: Space Before: 4 pt, After: 4 pt, Adjust space between Latin and Asian text, Adjust space between Asian text and numbers

Formatted: Space Before: 4 pt, After: 4 pt, Adjust space between Latin and Asian text, Adjust space between Asian text and numbers

Copyright © OASIS Open 2009-2011. All Rights Reserved. Standards Track Work Product

```
3159        <xsd:annotation>
3160          <xsd:documentation>
3161            The response to a SetBiographicData request.
3162          </xsd:documentation>
3163        </xsd:annotation>
3164        <xsd:sequence>
3165      <xsd:element name="SetBiographicDataResponsePackage" nillable="true">
3166      <xsd:complexType>
3167      <xsd:complexContent>
3168        <xsd:extension base="tns:ResponseTemplate">
3169          <xsd:sequence>
3170            <xsd:element name="Identity" type="tns:BIASIdentity" minOccurs="0" maxOccurs="1">
3171              <xsd:annotation>
3172                <xsd:documentation>In an encounter-centric model, identifies the encounter ID assigned to a new
3173      encounter.</xsd:documentation>
3174              </xsd:annotation>
3175            </xsd:element>
3176          </xsd:sequence>>>
3177        </xsd:extension>
3178      </xsd:complexContent>
3179    </xsd:complexType>
3180  </xsd:element>
3181    <xsd:element name="SetBiometricDataRequest">
3182    <</xsd:sequence>
3183  </xsd:complexType>
3184    </xsd:element>
3185  <xsd:element name="SetBiometricData">
3186  <xsd:complexType>
3187  <xsd:annotation>
3188    <xsd:documentation>
3189      Associates biometric data to a given subject record.
3190    </xsd:documentation>
3191  </xsd:annotation>
3192    <xsd:sequence>
3193  <xsd:element name="SetBiometricDataRequest" nillable="true">
3194  <xsd:complexType>
3195  <xsd:complexContent>
3196    <xsd:extension base="tns:RequestTemplate">
3197      <xsd:sequence>
```

Formatted: Space Before: 4 pt, After: 4 pt, Adjust space between Latin and Asian text, Adjust space between Asian text and numbers

Formatted: Space Before: 4 pt, After: 4 pt, Adjust space between Latin and Asian text, Adjust space between Asian text and numbers

Formatted: Space Before: 4 pt, After: 4 pt, Adjust space between Latin and Asian text, Adjust space between Asian text and numbers

Formatted: Space Before: 4 pt, After: 4 pt, Adjust space between Latin and Asian text, Adjust space between Asian text and numbers

Copyright © OASIS Open 2009-2011. All Rights Reserved.

```
————<xsd:element name="Identity" type="tns:BIASIdentity" minOccurs="1" maxOccurs="1">
————<xsd:annotation>
————<xsd:documentation>Identifies the subject or, in the encounter-centric model, a subject and an encounter,
and includes the biometric data to store.</xsd:documentation>
————</xsd:annotation>
————</xsd:element>
————</xsd:sequence>
———</xsd:extension>
——</xsd:complexContent>
—</xsd:complexType>
—</xsd:element>
—</xsd:sequence>
</xsd:complexType>
</xsd:element>
<xsd:element name="SetBiometricDataResponse">
——<xsd:complexType>
——<xsd:annotation>
———<xsd:documentation>
————The response to a SetBiometricData request.
———</xsd:documentation>
——</xsd:annotation>
——<xsd:sequence>
<xsd:element name="SetBiometricDataResponsePackage" nillable="true">
<xsd:complexType>
<xsd:complexContent>
———<xsd:extension base="tns:ResponseTemplate">
————<xsd:sequence>
————<xsd:element name="Identity" type="tns:BIASIdentity" minOccurs="0" maxOccurs="1">
————<xsd:annotation>
————<xsd:documentation>In an encounter-centric model, identifies the encounter ID assigned to a new
encounter.</xsd:documentation>
————</xsd:annotation>
————</xsd:element>
————</xsd:sequence>>>
———</xsd:extension>
——</xsd:complexContent>
——</xsd:complexType>
—</xsd:element>
—<xsd:element name="TransformBiometricDataRequest">
——<</xsd:sequence>
```

Formatted: Space Before: 4 pt, After: 4 pt, Adjust space between Latin and Asian text, Adjust space between Asian text and numbers

Formatted: Space Before: 4 pt, After: 4 pt, Adjust space between Latin and Asian text, Adjust space between Asian text and numbers

Copyright © OASIS Open 2009-2011. All Rights Reserved.

```
</xsd:complexType>
    </xsd:element>
<xsd:element name="TransformBiometricData">
<xsd:complexType>
<xsd:annotation>
    <xsd:documentation>
        Transforms or processes a given biometric in one format into a new target format.
    </xsd:documentation>
    </xsd:annotation>
    <xsd:sequence>
<xsd:element name="TransformBiometricDataRequest" nillable="true">
<xsd:complexType>
<xsd:complexContent>
    <xsd:extension base="tns:RequestTemplate">
    <xsd:sequence>
    <xsd:element name="InputBIR" type="tns:CBEFF_BIR_Type" minOccurs="1" maxOccurs="1">
    <xsd:annotation>
    <xsd:documentation>Data structure containing the biometric information to be
transformed.</xsd:documentation>
    </xsd:annotation>
    </xsd:element>
    <xsd:element name="TransformOperation" type="xsd:unsignedLong" minOccurs="1" maxOccurs="1">
    <xsd:annotation>
    <xsd:documentation>Value indicating the type of transformation to perform.</xsd:documentation>
    </xsd:annotation>
    </xsd:element>
    <xsd:element name="TransformControl" type="xsd:string" minOccurs="0" maxOccurs="1">
    <xsd:annotation>
    <xsd:documentation>Specifies controls for the requested transform operation.</xsd:documentation>
    </xsd:annotation>
    </xsd:element>
    </xsd:sequence>
    </xsd:extension>
</xsd:complexContent>
</xsd:complexType>
</xsd:element>
</xsd:sequence>
</xsd:complexType>
</xsd:element>
```

Formatted: Space Before: 4 pt, After: 4 pt, Adjust space between Latin and Asian text, Adjust space between Asian text and numbers

Formatted: Space Before: 4 pt, After: 4 pt, Adjust space between Latin and Asian text, Adjust space between Asian text and numbers

Formatted: Space Before: 4 pt, After: 4 pt, Adjust space between Latin and Asian text, Adjust space between Asian text and numbers

Formatted: Font: Calibri

Copyright © OASIS Open 2009-2011. All Rights Reserved.

```
<xsd:element name="TransformBiometricDataResponse">
    <xsd:complexType>
        <xsd:annotation>
            <xsd:documentation>
                The response to a TransformBiometricData request.
            </xsd:documentation>
        </xsd:annotation>
        <xsd:sequence>
<xsd:element name="TransformBiometricDataResponsePackage" nillable="true">
<xsd:complexType>
<xsd:complexContent>
            <xsd:extension base="tns:ResponseTemplate">
                <xsd:sequence>
                    <xsd:element name="OutputBIR" type="tns:CBEFF_BIR_Type" minOccurs="0" maxOccurs="1">
                        <xsd:annotation>
                            <xsd:documentation>Data structure containing the new, transformed biometric
information.</xsd:documentation>
                        </xsd:annotation>
                    </xsd:element>
                </xsd:sequence>
            </xsd:extension>
        </xsd:complexContent>
    </xsd:complexType>
</xsd:element>
    <xsd:element name="UpdateBiographicDataRequest">
    </xsd:sequence>
</xsd:complexType>
    </xsd:element>
<xsd:element name="UpdateBiographicData">
<xsd:complexType>
<xsd:annotation>
            <xsd:documentation>
                Updates the biographic data for a given subject record.
            </xsd:documentation>
        </xsd:annotation>
        <xsd:sequence>
<xsd:element name="UpdateBiographicDataRequest" nillable="true">
<xsd:complexType>
<xsd:complexContent>
```

Formatted: Space Before: 4 pt, After: 4 pt, Adjust space between Latin and Asian text, Adjust space between Asian text and numbers

Formatted: Space Before: 4 pt, After: 4 pt, Adjust space between Latin and Asian text, Adjust space between Asian text and numbers

Formatted: Space Before: 4 pt, After: 4 pt, Adjust space between Latin and Asian text, Adjust space between Asian text and numbers

Formatted: Space Before: 4 pt, After: 4 pt, Adjust space between Latin and Asian text, Adjust space between Asian text and numbers

Formatted: Space Before: 4 pt, After: 4 pt, Adjust space between Latin and Asian text, Adjust space between Asian text and numbers

Copyright © OASIS Open 2009-2011. All Rights Reserved.

```
3316        <xsd:extension base="tns:RequestTemplate">
3317          <xsd:sequence>
3318            <xsd:element name="Identity" type="tns:BIASIdentity" minOccurs="1" maxOccurs="1">
3319              <xsd:annotation>
3320                <xsd:documentation>Identifies the subject or, in the encounter-centric model, a subject and an encounter,
3321 and includes the biographic data to update.</xsd:documentation>
3322              </xsd:annotation>
3323            </xsd:element>
3324          </xsd:sequence>
3325        </xsd:extension>
3326      </xsd:complexContent>
3327    </xsd:complexType>
3328  </xsd:element>
3329  </xsd:sequence>
3330 </xsd:complexType>
3331 </xsd:element>
3332 <xsd:element name="UpdateBiographicDataResponse">
3333    <xsd:complexType>
3334      <xsd:annotation>
3335        <xsd:documentation>
3336          The response to an UpdateBiographicData request.
3337        </xsd:documentation>
3338      </xsd:annotation>
3339      <xsd:sequence>
3340 <xsd:element name="UpdateBiographicDataResponsePackage" nillable="true">
3341 <xsd:complexType>
3342 <xsd:complexContent>
3343        <xsd:extension base="tns:ResponseTemplate" />"/>
3344      </xsd:complexContent>
3345    </xsd:complexType>
3346  </xsd:element>
3347  </xsd:sequence>
3348 </xsd:complexType>
3349 </xsd:element>
3350 <xsd:element name="UpdateBiometricDataRequestUpdateBiometricData">
3351    <xsd:complexType>
3352      <xsd:annotation>
3353        <xsd:documentation>
3354          Updates a single biometric sample for a given subject record.
```

Formatted: Space Before: 4 pt, After: 4 pt, Adjust space between Latin and Asian text, Adjust space between Asian text and numbers

Formatted: Space Before: 4 pt, After: 4 pt, Adjust space between Latin and Asian text, Adjust space between Asian text and numbers

Formatted: Space Before: 4 pt, After: 4 pt, Adjust space between Latin and Asian text, Adjust space between Asian text and numbers

Copyright © OASIS Open 2009-2011. All Rights Reserved. Standards Track Work Product

```
        </xsd:documentation>
      </xsd:annotation>
      <xsd:sequence>
<xsd:element name="UpdateBiometricDataRequest" nillable="true">
<xsd:complexType>
<xsd:complexContent>
        <xsd:extension base="tns:RequestTemplate">
          <xsd:sequence>
            <xsd:element name="Identity" type="tns:BIASIdentity" minOccurs="1" maxOccurs="1">
              <xsd:annotation>
                <xsd:documentation>Identifies the subject or, in the encounter-centric model, a subject and an encounter,
and includes the biometric data to update.</xsd:documentation>
              </xsd:annotation>
            </xsd:element>
            <xsd:element name="Merge" type="xsd:boolean" minOccurs="0" maxOccurs="1">
              <xsd:annotation>
                <xsd:documentation>Value indicating if the input biometric sample should be merged with any existing
biometric information.</xsd:documentation>
              </xsd:annotation>
            </xsd:element>
          </xsd:sequence>
        </xsd:extension>
      </xsd:complexContent>
    </xsd:complexType>
  </xsd:element>
  </xsd:sequence>
</xsd:complexType>
</xsd:element>
<xsd:element name="UpdateBiometricDataResponse">
  <xsd:complexType>
    <xsd:annotation>
      <xsd:documentation>
        The response to an UpdateBiometricData request.
      </xsd:documentation>
    </xsd:annotation>
    <xsd:sequence>
<xsd:element name="UpdateBiometricDataResponsePackage" nillable="true">
<xsd:complexType>
<xsd:complexContent>
        <xsd:extension base="tns:ResponseTemplate" />"/>
```

Formatted: Space Before: 4 pt, After: 4 pt, Adjust space between Latin and Asian text, Adjust space between Asian text and numbers

Formatted: Space Before: 4 pt, After: 4 pt, Adjust space between Latin and Asian text, Adjust space between Asian text and numbers

Formatted: Space Before: 4 pt, After: 4 pt, Adjust space between Latin and Asian text, Adjust space between Asian text and numbers

Copyright © OASIS Open 2009-2011. All Rights Reserved.

```
3395        </xsd:complexContent>
3396      </xsd:complexType>
3397    </xsd:element>
3398    </xsd:sequence>
3399  </xsd:complexType>
3400  </xsd:element>
3401  <xsd:element name="~~VerifySubjectRequest~~VerifySubject">
3402    <xsd:complexType>
3403      <xsd:annotation>
3404        <xsd:documentation>
3405          Performs a 1:1 verification match between a given biometric and
3406          either a claim to identity in a given gallery or another given
3407          biometric.
3408        </xsd:documentation>
3409      </xsd:annotation>
3410      <xsd:sequence>
3411  <xsd:element name="VerifySubjectRequest" nillable="true">
3412  <xsd:complexType>
3413  <xsd:complexContent>
3414        <xsd:extension base="tns:RequestTemplate">
3415          <xsd:sequence>
3416            <xsd:element name="GalleryID" type="tns:BIASIDType" minOccurs="0" maxOccurs="1">
3417              <xsd:annotation>
3418                <xsd:documentation>The identifier of the gallery or population group of which the subject must be a
3419  member.</xsd:documentation>
3420              </xsd:annotation>
3421            </xsd:element>
3422            <xsd:element name="Identity" type="tns:BIASIdentity" minOccurs="1" maxOccurs="1">
3423              <xsd:annotation>
3424                <xsd:documentation>Includes the identifying information and/or input and reference biometric
3425  samples.</xsd:documentation>
3426              </xsd:annotation>
3427            </xsd:element>
3428          </xsd:sequence>
3429        </xsd:extension>
3430      </xsd:complexContent>
3431    </xsd:complexType>
3432  </xsd:element>
3433  </xsd:sequence>
3434  </xsd:complexType>
```

Formatted: Space Before: 4 pt, After: 4 pt, Adjust space between Latin and Asian text, Adjust space between Asian text and numbers

Formatted: Space Before: 4 pt, After: 4 pt, Adjust space between Latin and Asian text, Adjust space between Asian text and numbers

Copyright © OASIS Open 2009-2011. All Rights Reserved.

```
</xsd:element>
<xsd:element name="VerifySubjectResponse">
    <xsd:complexType>
        <xsd:annotation>
            <xsd:documentation>
                The response to a VerifySubject request.
            </xsd:documentation>
        </xsd:annotation>
        <xsd:sequence>
<xsd:element name="VerifySubjectResponsePackage" nillable="true">
<xsd:complexType>
<xsd:complexContent>
            <xsd:extension base="tns:ResponseTemplate">
                <xsd:sequence>
                    <xsd:element name="Match" type="xsd:boolean" minOccurs="0" maxOccurs="1">
                        <xsd:annotation>
                            <xsd:documentation>Indicates if the Input BIR matched either the biometric information associated with
the Identity Claim or the Reference BIR.</xsd:documentation>
                        </xsd:annotation>
                    </xsd:element>
                    <xsd:element name="Score" type="tns:Score" minOccurs="0" maxOccurs="1">
                        <xsd:annotation>
                            <xsd:documentation>The score if the biometric information matched.</xsd:documentation>
                        </xsd:annotation>
                    </xsd:element>
                </xsd:sequence>
            </xsd:extension>
        </xsd:complexContent>
    </xsd:complexType>
</xsd:element>
    <xsd:element name="EnrollRequest">
    </xsd:sequence>
</xsd:complexType>
        </xsd:element>
<xsd:element name="Enroll">
<xsd:complexType>
<xsd:annotation>
            <xsd:documentation>
                The Enroll aggregate service adds a new subject or, in an
```

Formatted: Space Before: 4 pt, After: 4 pt, Adjust space between Latin and Asian text, Adjust space between Asian text and numbers

Formatted: Space Before: 4 pt, After: 4 pt, Adjust space between Latin and Asian text, Adjust space between Asian text and numbers

Formatted: Space Before: 4 pt, After: 4 pt, Adjust space between Latin and Asian text, Adjust space between Asian text and numbers

Formatted: Space Before: 4 pt, After: 4 pt, Adjust space between Latin and Asian text, Adjust space between Asian text and numbers

Copyright © OASIS Open 2009-2011. All Rights Reserved. Standards Track Work Product

```
3474        encounter-centric model, a new encounter to the system. This may
3475        be accomplished in a number of different ways according to
3476        system requirements and/or resources. If the Enroll aggregate
3477        service is implemented as a synchronous service, the
3478        implementing system immediately processes the request and
3479        returns the results in the ReturnData parameter. If the Enroll
3480        aggregate service is implemented as an asynchronous service, the
3481        implementing system returns a token in the ReturnData
3482        parameter, which is an indication that the request is being
3483        handled asynchronously. In this case, the GetEnrollResults
3484        service is used to poll for the results of the Enroll request.
3485      </xsd:documentation>
3486    </xsd:annotation>
3487    <xsd:sequence>
3488  <xsd:element name="EnrollRequest" nillable="true">
3489  <xsd:complexType>
3490  <xsd:complexContent>
3491      <xsd:extension base="tns:AggregateRequestTemplate" />"/>
3492    </xsd:complexContent>
3493  </xsd:complexType>
3494  </xsd:element>
3495  </xsd:sequence>
3496  </xsd:complexType>
3497  </xsd:element>
3498  <xsd:element name="EnrollResponse">
3499  <xsd:complexType>
3500    <xsd:annotation>
3501      <xsd:documentation>The response to an Enroll request.</xsd:documentation>
3502    </xsd:annotation>
3503    <xsd:sequence>
3504  <xsd:element name="EnrollResponsePackage" nillable="true">
3505  <xsd:complexType>
3506  <xsd:complexContent>
3507      <xsd:extension base="tns:AggregateResponseTemplate" />"/>
3508    </xsd:complexContent>
3509  </xsd:complexType>
3510  </xsd:element>
3511  </xsd:sequence>
3512  </xsd:complexType>
```

Formatted: Space Before: 4 pt, After: 4 pt, Adjust space between Latin and Asian text, Adjust space between Asian text and numbers

Formatted: Space Before: 4 pt, After: 4 pt, Adjust space between Latin and Asian text, Adjust space between Asian text and numbers

Formatted: Space Before: 4 pt, After: 4 pt, Adjust space between Latin and Asian text, Adjust space between Asian text and numbers

Copyright © OASIS Open 2009-2011. All Rights Reserved. Standards Track Work Product

```
</xsd:element>
<xsd:element name="~~GetEnrollResultsRequest~~GetEnrollResults">
    <xsd:complexType>
        <xsd:annotation>
            <xsd:documentation>
                The GetEnrollResults aggregate service retrieves the enrollment
                results for the specified token. This service is used in
                conjunction with the Enroll aggregate service. If the Enroll
                aggregate service is implemented as an asynchronous service, the
                implementing system returns a token, and the GetEnrollResults
                service is used to poll for the results of the original Enroll
                request.
            </xsd:documentation>
        </xsd:annotation>
        <xsd:sequence>
<xsd:element name="GetEnrollResultsRequest" nillable="true">
<xsd:complexType>
<xsd:complexContent>
            <xsd:extension base="tns:RequestTemplate">
                <xsd:sequence>
                    <xsd:element name="Token" type="tns:TokenType" minOccurs="1" maxOccurs="1">
                        <xsd:annotation>
                            <xsd:documentation>A value used to retrieve the results of the Enroll request.</xsd:documentation>
                        </xsd:annotation>
                    </xsd:element>
                </xsd:sequence>
            </xsd:extension>
        </xsd:complexContent>
    </xsd:complexType>
</xsd:element>
        </xsd:sequence>
</xsd:complexType>
</xsd:element>
<xsd:element name="GetEnrollResultsResponse">
    <xsd:complexType>
        <xsd:annotation>
            <xsd:documentation>The response to a GetEnrollResults request.</xsd:documentation>
        </xsd:annotation>
        <xsd:sequence>
```

Formatted: Space Before: 4 pt, After: 4 pt, Adjust space between Latin and Asian text, Adjust space between Asian text and numbers

Formatted: Space Before: 4 pt, After: 4 pt, Adjust space between Latin and Asian text, Adjust space between Asian text and numbers

Formatted: Space Before: 4 pt, After: 4 pt, Adjust space between Latin and Asian text, Adjust space between Asian text and numbers

Copyright © OASIS Open 2009-2011. All Rights Reserved.— Standards Track Work Product

```
<xsd:element name="GetEnrollResultsResponsePackage" nillable="true">
<xsd:complexType>
<xsd:complexContent>
    <xsd:extension base="tns:AggregateResponseTemplate" />"/>
  </xsd:complexContent>
 </xsd:complexType>
</xsd:element>
 </xsd:sequence>
</xsd:complexType>
</xsd:element>
<xsd:element name="GetIdentifyResultsRequestGetIdentifyResults">
 <xsd:complexType>
  <xsd:annotation>
   <xsd:documentation>
    The GetIdentifyResults aggregate service retrieves the
    identification results for the specified token. This service is
    used in conjunction with the Identify aggregate service. If the
    Identify aggregate service is implemented as an asynchronous
    service, the implementing system returns a token, and the
    GetIdentifyResults service is used to poll for the results of
    the original Identify request.
   </xsd:documentation>
  </xsd:annotation>
  <xsd:sequence>
<xsd:element name="GetIdentifyResultsRequest" nillable="true">
<xsd:complexType>
<xsd:complexContent>
   <xsd:extension base="tns:RequestTemplate">
    <xsd:sequence>
     <xsd:element name="Token" type="tns:TokenType" minOccurs="1" maxOccurs="1">
      <xsd:annotation>
       <xsd:documentation>A value used to retrieve the results of the Identify request.</xsd:documentation>
      </xsd:annotation>
     </xsd:element>
    </xsd:sequence>
   </xsd:extension>
  </xsd:complexContent>
 </xsd:complexType>
</xsd:element>
```

Formatted: Space Before: 4 pt, After: 4 pt, Adjust space between Latin and Asian text, Adjust space between Asian text and numbers

Formatted: Space Before: 4 pt, After: 4 pt, Adjust space between Latin and Asian text, Adjust space between Asian text and numbers

Formatted: Space Before: 4 pt, After: 4 pt, Adjust space between Latin and Asian text, Adjust space between Asian text and numbers

Copyright © OASIS Open 2009-2011. All Rights Reserved.

```
    </xsd:sequence>
  </xsd:complexType>
 </xsd:element>
 <xsd:element name="GetIdentifyResultsResponse">
  <xsd:complexType>
   <xsd:annotation>
    <xsd:documentation>The response to a GetIdentifyResults request.</xsd:documentation>
   </xsd:annotation>
   <xsd:sequence>
<xsd:element name="GetIdentifyResultsResponsePackage" nillable="true">
<xsd:complexType>
<xsd:complexContent>
    <xsd:extension base="tns:AggregateResponseTemplate" />"/>
   </xsd:complexContent>
  </xsd:complexType>
 </xsd:element>
   </xsd:sequence>
</xsd:complexType>
</xsd:element>
<xsd:element name="GetVerifyResultsRequestGetVerifyResults">
  <xsd:complexType>
   <xsd:annotation>
    <xsd:documentation>
     The GetVerifyResults aggregate service retrieves the verification
     results for the specified token. This service is used in
     conjunction with the Verify aggregate service. If the Verify
     aggregate service is implemented as an asynchronous service, the
     implementing system returns a token, and the GetVerifyResults
     service is used to poll for the results of the original Verify
     request.
    </xsd:documentation>
   </xsd:annotation>
   <xsd:sequence>
<xsd:element name="GetVerifyResultsRequest" nillable="true">
<xsd:complexType>
<xsd:complexContent>
    <xsd:extension base="tns:RequestTemplate">
     <xsd:sequence>
      <xsd:element name="Token" type="tns:TokenType" minOccurs="1" maxOccurs="1">
```

Formatted: Space Before: 4 pt, After: 4 pt, Adjust space between Latin and Asian text, Adjust space between Asian text and numbers

Formatted: Space Before: 4 pt, After: 4 pt, Adjust space between Latin and Asian text, Adjust space between Asian text and numbers

Formatted: Space Before: 4 pt, After: 4 pt, Adjust space between Latin and Asian text, Adjust space between Asian text and numbers

Formatted: Space Before: 4 pt, After: 4 pt, Adjust space between Latin and Asian text, Adjust space between Asian text and numbers

Copyright © OASIS Open 2009-2011. All Rights Reserved.

```
            <xsd:annotation>
            <xsd:documentation>A value used to retrieve the results of the Verify request.</xsd:documentation>
            </xsd:annotation>
        </xsd:element>
    </xsd:sequence>
</xsd:extension>
</xsd:complexContent>
</xsd:complexType>
</xsd:sequence>
</xsd:complexType>
</xsd:element>
<xsd:element name="GetVerifyResultsResponse">
<xsd:complexType>
<xsd:annotation>
<xsd:documentation>The response to a GetVerifyResults request.</xsd:documentation>
</xsd:annotation>
<xsd:sequence>
<xsd:element name="GetVerifyResultsResponsePackage" nillable="true">
<xsd:complexType>
<xsd:complexContent>
<xsd:extension base="tns:AggregateResponseTemplate">
<xsd:sequence>
<xsd:element name="Match" type="xsd:boolean" minOccurs="0" maxOccurs="1">
<xsd:annotation>
<xsd:documentation>Indicates if the Input BIR matched either the biometric information associated with the Identity Claim or the Reference BIR.</xsd:documentation>
</xsd:annotation>
</xsd:element>
<xsd:element name="Score" type="tns:Score" minOccurs="0" maxOccurs="1">
<xsd:annotation>
<xsd:documentation>The score if the biometric information matched.</xsd:documentation>
</xsd:annotation>
</xsd:element>
</xsd:sequence>
</xsd:extension>
</xsd:complexContent>
</xsd:complexType>
</xsd:element>
```

Formatted: Space Before: 4 pt, After: 4 pt, Adjust space between Latin and Asian text, Adjust space between Asian text and numbers

Formatted: Space Before: 4 pt, After: 4 pt, Adjust space between Latin and Asian text, Adjust space between Asian text and numbers

Copyright © OASIS Open 2009-2011. All Rights Reserved. Standards Track Work Product

```
    <xsd:element name="IdentifyRequest">
    </xsd:sequence>
</xsd:complexType>
    </xsd:element>
<xsd:element name="Identify">
<xsd:complexType>
<xsd:annotation>
    <xsd:documentation>
    The Identify aggregate service performs an identification
    function according to system requirements and/or resources. If
    the Identify aggregate service is implemented as a synchronous
    service, the implementing system immediately processes the
    request and returns the results in the ReturnData parameter. If
    the Identify aggregate service is implemented as an asynchronous
    service, the implementing system returns a token in the
    ReturnData parameter, which is an indication that the request is
    being handled asynchronously. In this case, the
    GetIdentifyResults service is used to poll for the results of
    the Identify request.
    </xsd:documentation>
    </xsd:annotation>
    <xsd:sequence>
<xsd:element name="IdentifyRequest" nillable="true">
<xsd:complexType>
<xsd:complexContent>
    <xsd:extension base="tns:AggregateRequestTemplate" />"/>
    </xsd:complexContent>
  </xsd:complexType>
 </xsd:element>
 </xsd:sequence>
</xsd:complexType>
</xsd:element>
<xsd:element name="IdentifyResponse">
  <xsd:complexType>
    <xsd:annotation>
      <xsd:documentation>The response to an Identify request.</xsd:documentation>
    </xsd:annotation>
    <xsd:sequence>
<xsd:element name="IdentifyResponsePackage" nillable="true">
```

Formatted: Space Before: 4 pt, After: 4 pt, Adjust space between Latin and Asian text, Adjust space between Asian text and numbers

Formatted: Space Before: 4 pt, After: 4 pt, Adjust space between Latin and Asian text, Adjust space between Asian text and numbers

Formatted: Space Before: 4 pt, After: 4 pt, Adjust space between Latin and Asian text, Adjust space between Asian text and numbers

Formatted: Space Before: 4 pt, After: 4 pt, Adjust space between Latin and Asian text, Adjust space between Asian text and numbers

Copyright © OASIS Open 2009-2011. All Rights Reserved. Standards Track Work Product

```
<xsd:complexType>
<xsd:complexContent>
    <xsd:extension base="tns:AggregateResponseTemplate"/>
  </xsd:complexContent>
 </xsd:complexType>
</xsd:element>
</xsd:sequence>
</xsd:complexType>
</xsd:element>
<xsd:element name="RetrieveInformationRequestRetrieveInformation">
 <xsd:complexType>
  <xsd:annotation>
   <xsd:documentation>
    The RetrieveInformation aggregate service retrieves requested
    information about a subject, or in an encounter-centric model
    about an encounter. In a person-centric model, this aggregate
    service may be used to retrieve both biographic and biometric
    information for a subject record. In an encounter-centric model,
    this aggregate service may be used to retrieve biographic and/or
    biometric information for either a single encounter or all
    encounters. Either a SubjectID or EncounterID must be specified
    in the Identify parameter.
   </xsd:documentation>
  </xsd:annotation>
  <xsd:sequence>
<xsd:element name="RetrieveInformationRequest" nillable="true">
<xsd:complexType>
<xsd:complexContent>
    <xsd:extension base="tns:RequestTemplate">
     <xsd:sequence>
      <xsd:element name="ProcessingOptions" type="tns:ProcessingOptionsType" minOccurs="1" maxOccurs="1">
       <xsd:annotation>
        <xsd:documentation>Options that guide how the service request is processed, and may identify what
type(s) of information should be returned.</xsd:documentation>
       </xsd:annotation>
      </xsd:element>
      <xsd:element name="Identity" type="tns:BIASIdentity" minOccurs="1" maxOccurs="1">
       <xsd:annotation>
        <xsd:documentation>Includes the identifier of the subject or encounter.</xsd:documentation>
```

Formatted: Space Before: 4 pt, After: 4 pt, Adjust space between Latin and Asian text, Adjust space between Asian text and numbers

Formatted: Space Before: 4 pt, After: 4 pt, Adjust space between Latin and Asian text, Adjust space between Asian text and numbers

Formatted: Space Before: 4 pt, After: 4 pt, Adjust space between Latin and Asian text, Adjust space between Asian text and numbers

Copyright © OASIS Open 2009-2011. All Rights Reserved.

```
3747            </xsd:annotation>
3748          </xsd:element>
3749        </xsd:sequence>
3750      </xsd:extension>
3751    </xsd:complexContent>
3752  </xsd:complexType>
3753 </xsd:element>
3754 </xsd:sequence>
3755 </xsd:complexType>
3756 </xsd:element>
3757 <xsd:element name="RetrieveInformationResponse">
3758   <xsd:complexType>
3759     <xsd:annotation>
3760       <xsd:documentation>The response to a RetrieveInformation request.</xsd:documentation>
3761     </xsd:annotation>
3762     <xsd:sequence>
3763 <xsd:element name="RetrieveInformationResponsePackage" nillable="true">
3764 <xsd:complexType>
3765 <xsd:complexContent>
3766       <xsd:extension base="tns:AggregateResponseTemplate" />"/>
3767     </xsd:complexContent>
3768   </xsd:complexType>
3769 </xsd:element>
3770 </xsd:sequence>
3771 </xsd:complexType>
3772 </xsd:element>
3773 <xsd:element name="VerifyRequestVerify">
3774   <xsd:complexType>
3775     <xsd:annotation>
3776       <xsd:documentation>
3777         The Verify aggregate service performs a 1:1 verification
3778         function according to system requirements and/or resources.
3779         Either the IdentityClaim or ReferenceBIR input data elements in
3780         the Identity parameter are required. If the Verify aggregate
3781         service is implemented as a synchronous service, the
3782         implementing system immediately processes the request and returns
3783         the results in the ReturnData parameter. If the Verify aggregate
3784         service is implemented as an asynchronous service, the
3785         implementing system returns a token in the ReturnData parameter,
```

Formatted: Space Before: 4 pt, After: 4 pt, Adjust space between Latin and Asian text, Adjust space between Asian text and numbers

Formatted: Space Before: 4 pt, After: 4 pt, Adjust space between Latin and Asian text, Adjust space between Asian text and numbers

Formatted: Space Before: 4 pt, After: 4 pt, Adjust space between Latin and Asian text, Adjust space between Asian text and numbers

Copyright © OASIS Open 2009-2011. All Rights Reserved. Standards Track Work Product

```
3786        which is an indication that the request is being handled
3787        asynchronously. In this case, the GetVerifyResults service is
3788        used to poll for the results of the Verify request.
3789      </xsd:documentation>
3790    </xsd:annotation>
3791    <xsd:sequence>
3792  <xsd:element name="VerifyRequest" nillable="true">
3793  <xsd:complexType>
3794  <xsd:complexContent>
3795      <xsd:extension base="tns:AggregateRequestTemplate">
3796        <xsd:sequence>
3797          <xsd:element name="Identity" type="tns:BIASIdentity" minOccurs="1" maxOccurs="1">
3798            <xsd:annotation>
3799              <xsd:documentation>Includes either the IdentityClaim or ReferenceBIR.</xsd:documentation>
3800            </xsd:annotation>
3801          </xsd:element>
3802          <xsd:element name="GalleryID" type="tns:BIASIDType" minOccurs="0" maxOccurs="1">
3803            <xsd:annotation>
3804              <xsd:documentation>The identifier of the gallery or population group of which the subject must be a
3805  member.</xsd:documentation>
3806            </xsd:annotation>
3807          </xsd:element>
3808        </xsd:sequence>
3809      </xsd:extension>
3810    </xsd:complexContent>
3811    </xsd:complexType>
3812  </xsd:element>
3813  </xsd:sequence>
3814  </xsd:complexType>
3815  </xsd:element>
3816  <xsd:element name="VerifyResponse">
3817    <xsd:complexType>
3818    <xsd:annotation>
3819      <xsd:documentation>The response to a Verify request.</xsd:documentation>
3820    </xsd:annotation>
3821    <xsd:sequence>
3822  <xsd:element name="VerifyResponsePackage" nillable="true">
3823  <xsd:complexType>
3824  <xsd:complexContent>
```

Formatted: Space Before: 4 pt, After: 4 pt, Adjust space between Latin and Asian text, Adjust space between Asian text and numbers

Formatted: Space Before: 4 pt, After: 4 pt, Adjust space between Latin and Asian text, Adjust space between Asian text and numbers

Formatted: Space Before: 4 pt, After: 4 pt, Adjust space between Latin and Asian text, Adjust space between Asian text and numbers

Copyright © OASIS Open 2009-2011. All Rights Reserved.

```
————<xsd:extension base="tns:AggregateResponseTemplate">
————<xsd:sequence>
————<xsd:element name="Match" type="xsd:boolean" minOccurs="0" maxOccurs="1">
————<xsd:annotation>
————<xsd:documentation>Indicates if the Input BIR matched either the biometric information associated with
the Identity Claim or the Reference BIR.</xsd:documentation>
————</xsd:annotation>
————</xsd:element>
————<xsd:element name="Score" type="tns:Score" minOccurs="0" maxOccurs="1">
————<xsd:annotation>
————<xsd:documentation>The score if the biometric information matched.</xsd:documentation>
————</xsd:annotation>
————</xsd:element>
————</xsd:sequence>
————</xsd:extension>
——</xsd:complexContent>
——</xsd:complexType>
——</xsd:element>
——</xsd:sequence>
</xsd:complexType>
</xsd:element>
<xsd:element name="BIASFault" type="tns:BIASFaultDetail"/>
——</xsd:schema>
—</wsdl:types>
—<wsdl:message name="BIASFaultMessage">
<wsdl:part name="parameters" element="tns:BIASFault"/>
</wsdl:message>
<wsdl:message name="AddSubjectToGalleryRequestMessage">
——<wsdl:part name="AddSubjectToGalleryRequestparameters" element="AddSubjectToGalleryRequest"
/>tns:AddSubjectToGallery"/>
—</wsdl:message>
—<wsdl:message name="AddSubjectToGalleryResponseMessage">
——<wsdl:part name="parameters" element="tns:AddSubjectToGalleryResponse"
element="AddSubjectToGalleryResponse" />"/>
—</wsdl:message>
—<wsdl:message name="CheckQualityRequestMessage">
——<wsdl:part name="CheckQualityRequestparameters" element="CheckQualityRequest" />tns:CheckQuality"/>
—</wsdl:message>
—<wsdl:message name="CheckQualityResponseMessage">
——<wsdl:part name="parameters" element="tns:CheckQualityResponse" element="CheckQualityResponse" />"/>
```

Formatted: Space Before: 4 pt, After: 4 pt, Adjust space between Latin and Asian text, Adjust space between Asian text and numbers

Formatted: Space Before: 4 pt, After: 4 pt, Adjust space between Latin and Asian text, Adjust space between Asian text and numbers

Copyright © OASIS Open 2009-2011. All Rights Reserved.

```
3865  –</wsdl:message>
3866  –<wsdl:message name="ClassifyBiometricDataRequestMessage">
3867  —<wsdl:part name="ClassifyBiometricDataRequestparameters" element="ClassifyBiometricDataRequest"
3868  />tns:ClassifyBiometricData"/>
3869  –</wsdl:message>
3870  –<wsdl:message name="ClassifyBiometricDataResponseMessage">
3871  —<wsdl:part name="parameters" element="tns:ClassifyBiometricDataResponse"
3872  element="ClassifyBiometricDataResponse" />"/>
3873  –</wsdl:message>
3874  –<wsdl:message name="CreateSubjectRequestMessage">
3875  —<wsdl:part name="CreateSubjectRequestparameters" element="CreateSubjectRequest" />tns:CreateSubject"/>
3876  –</wsdl:message>
3877  –<wsdl:message name="CreateSubjectResponseMessage">
3878  —<wsdl:part name="parameters" element="tns:CreateSubjectResponse" element="CreateSubjectResponse" />"/>
3879  –</wsdl:message>
3880  –<wsdl:message name="DeleteBiographicDataRequestMessage">
3881  —<wsdl:part name="DeleteBiographicDataRequestparameters" element="DeleteBiographicDataRequest"
3882  />tns:DeleteBiographicData"/>
3883  –</wsdl:message>
3884  –<wsdl:message name="DeleteBiographicDataResponseMessage">
3885  —<wsdl:part name="parameters" element="tns:DeleteBiographicDataResponse"
3886  element="DeleteBiographicDataResponse" />"/>
3887  –</wsdl:message>
3888  –<wsdl:message name="DeleteBiometricDataRequestMessage">
3889  —<wsdl:part name="DeleteBiometricDataRequestparameters" element="DeleteBiometricDataRequest"
3890  />tns:DeleteBiometricData"/>
3891  –</wsdl:message>
3892  –<wsdl:message name="DeleteBiometricDataResponseMessage">
3893  —<wsdl:part name="parameters" element="tns:DeleteBiometricDataResponse"
3894  element="DeleteBiometricDataResponse" />"/>
3895  –</wsdl:message>
3896  –<wsdl:message name="DeleteSubjectRequestMessage">
3897  —<wsdl:part name="DeleteSubjectRequestparameters" element="DeleteSubjectRequest" />tns:DeleteSubject"/>
3898  –</wsdl:message>
3899  –<wsdl:message name="DeleteSubjectResponseMessage">
3900  —<wsdl:part name="parameters" element="tns:DeleteSubjectResponse" element="DeleteSubjectResponse" />"/>
3901  –</wsdl:message>
3902  –<wsdl:message name="DeleteSubjectFromGalleryRequestMessage">
3903  —<wsdl:part name="DeleteSubjectFromGalleryRequestparameters" element="DeleteSubjectFromGalleryRequest"
3904  />tns:DeleteSubjectFromGallery"/>
3905  –</wsdl:message>
```


Copyright © OASIS Open 2009-2011. All Rights Reserved.— Standards Track Work Product

```
–<wsdl:message name="DeleteSubjectFromGalleryResponseMessage">
—<wsdl:part name="parameters" element="tns:DeleteSubjectFromGalleryResponse"
element="DeleteSubjectFromGalleryResponse" />"/>
–</wsdl:message>
–<wsdl:message name="GetIdentifySubjectResultsRequestMessage">
—<wsdl:part name="GetIdentifySubjectResultsRequestparameters" element="GetIdentifySubjectResultsRequest"
/>tns:GetIdentifySubjectResults"/>
–</wsdl:message>
–<wsdl:message name="GetIdentifySubjectResultsResponseMessage">
—<wsdl:part name="parameters" element="tns:GetIdentifySubjectResultsResponse"
element="GetIdentifySubjectResultsResponse" />"/>
–</wsdl:message>
–<wsdl:message name="IdentifySubjectRequestMessage">
—<wsdl:part name="IdentifySubjectRequestparameters" element="IdentifySubjectRequest" />tns:IdentifySubject"/>
–</wsdl:message>
–<wsdl:message name="IdentifySubjectResponseMessage">
—<wsdl:part name="parameters" element="tns:IdentifySubjectResponse" element="IdentifySubjectResponse" />"/>
–</wsdl:message>
–<wsdl:message name="ListBiographicDataRequestMessage">
—<wsdl:part name="ListBiographicDataRequestparameters" element="ListBiographicDataRequest"
/>tns:ListBiographicData"/>
–</wsdl:message>
–<wsdl:message name="ListBiographicDataResponseMessage">
—<wsdl:part name="parameters" element="tns:ListBiographicDataResponse" element="ListBiographicDataResponse"
/>"/>
–</wsdl:message>
–<wsdl:message name="ListBiometricDataRequestMessage">
—<wsdl:part name="ListBiometricDataRequestparameters" element="ListBiometricDataRequest"
/>tns:ListBiometricData"/>
–</wsdl:message>
–<wsdl:message name="ListBiometricDataResponseMessage">
—<wsdl:part name="parameters" element="tns:ListBiometricDataResponse" element="ListBiometricDataResponse"
/>"/>
–</wsdl:message>
–<wsdl:message name="PerformFusionRequestMessage">
—<wsdl:part name="PerformFusionRequestparameters" element="PerformFusionRequest" />tns:PerformFusion"/>
–</wsdl:message>
–<wsdl:message name="PerformFusionResponseMessage">
—<wsdl:part name="parameters" element="tns:PerformFusionResponse" element="PerformFusionResponse" />"/>
–</wsdl:message>
–<wsdl:message name="QueryCapabilitiesRequestMessage">
```


Copyright © OASIS Open 2009-2011. All Rights Reserved.

```
—<wsdl:part name="QueryCapabilitiesRequestparameters" element="QueryCapabilitiesRequest"
/>tns:QueryCapabilities"/>
–</wsdl:message>
–<wsdl:message name="QueryCapabilitiesResponseMessage">
—<wsdl:part name="parameters" element="tns:QueryCapabilitiesResponse" element="QueryCapabilitiesResponse"
/>"/>
–</wsdl:message>
–<wsdl:message name="RetrieveBiographicInformationRequestMessage">
—<wsdl:part name="RetrieveBiographicInformationRequestparameters"
element="RetrieveBiographicInformationRequest" />tns:RetrieveBiographicInformation"/>
–</wsdl:message>
–<wsdl:message name="RetrieveBiographicInformationResponseMessage">
—<wsdl:part name="parameters" element="tns:RetrieveBiographicInformationResponse"
element="RetrieveBiographicInformationResponse" />"/>
–</wsdl:message>
–<wsdl:message name="RetrieveBiometricInformationRequestMessage">
—<wsdl:part name="RetrieveBiometricInformationRequestparameters"
element="RetrieveBiometricInformationRequest" />tns:RetrieveBiometricInformation"/>
–</wsdl:message>
–<wsdl:message name="RetrieveBiometricInformationResponseMessage">
—<wsdl:part name="parameters" element="tns:RetrieveBiometricInformationResponse"
element="RetrieveBiometricInformationResponse" />"/>
–</wsdl:message>
–<wsdl:message name="SetBiographicDataRequestMessage">
—<wsdl:part name="SetBiographicDataRequestparameters" element="SetBiographicDataRequest"
/>tns:SetBiographicData"/>
–</wsdl:message>
–<wsdl:message name="SetBiographicDataResponseMessage">
—<wsdl:part name="parameters" element="tns:SetBiographicDataResponse" element="SetBiographicDataResponse"
/>"/>
–</wsdl:message>
–<wsdl:message name="SetBiometricDataRequestMessage">
—<wsdl:part name="SetBiometricDataRequestparameters" element="SetBiometricDataRequest"
/>tns:SetBiometricData"/>
–</wsdl:message>
–<wsdl:message name="SetBiometricDataResponseMessage">
—<wsdl:part name="parameters" element="tns:SetBiometricDataResponse" element="SetBiometricDataResponse"
/>"/>
–</wsdl:message>
–<wsdl:message name="TransformBiometricDataRequestMessage">
—<wsdl:part name="TransformBiometricDataRequestparameters" element="TransformBiometricDataRequest"
/>tns:TransformBiometricData"/>
```


Copyright © OASIS Open 2009-2011. All Rights Reserved.— Standards Track Work Product

```
–</wsdl:message>
–<wsdl:message name="TransformBiometricDataResponseMessage">
—<wsdl:part name="parameters" element="tns:TransformBiometricDataResponse"
element="TransformBiometricDataResponse" />"/>
–</wsdl:message>
–<wsdl:message name="UpdateBiographicDataRequestMessage">
—<wsdl:part name="UpdateBiographicDataRequestparameters" element="UpdateBiographicDataRequest"
/>tns:UpdateBiographicData"/>
–</wsdl:message>
–<wsdl:message name="UpdateBiographicDataResponseMessage">
—<wsdl:part name="parameters" element="tns:UpdateBiographicDataResponse"
element="UpdateBiographicDataResponse" />"/>
–</wsdl:message>
–<wsdl:message name="UpdateBiometricDataRequestMessage">
—<wsdl:part name="UpdateBiometricDataRequestparameters" element="UpdateBiometricDataRequest"
/>tns:UpdateBiometricData"/>
–</wsdl:message>
–<wsdl:message name="UpdateBiometricDataResponseMessage">
—<wsdl:part name="parameters" element="tns:UpdateBiometricDataResponse"
element="UpdateBiometricDataResponse" />"/>
–</wsdl:message>
–<wsdl:message name="VerifySubjectRequestMessage">
—<wsdl:part name="VerifySubjectRequestparameters" element="VerifySubjectRequest" />tns:VerifySubject"/>
–</wsdl:message>
–<wsdl:message name="VerifySubjectResponseMessage">
—<wsdl:part name="parameters" element="tns:VerifySubjectResponse" element="VerifySubjectResponse" />"/>
–</wsdl:message>
–<wsdl:message name="EnrollRequestMessage">
—<wsdl:part name="EnrollRequestparameters" element="EnrollRequest" />tns:Enroll"/>
–</wsdl:message>
–<wsdl:message name="EnrollResponseMessage">
—<wsdl:part name="parameters" element="tns:EnrollResponse" element="EnrollResponse" />"/>
–</wsdl:message>
–<wsdl:message name="GetEnrollResultsRequestMessage">
—<wsdl:part name="GetEnrollResultsRequestparameters" element="GetEnrollResultsRequest"
/>tns:GetEnrollResults"/>
–</wsdl:message>
–<wsdl:message name="GetEnrollResultsResponseMessage">
—<wsdl:part name="parameters" element="tns:GetEnrollResultsResponse" element="GetEnrollResultsResponse"
/>"/>
–</wsdl:message>
```


Copyright © OASIS Open 2009-2011. All Rights Reserved.— Standards Track Work Product

```
–<wsdl:message name="GetIdentifyResultsRequestMessage">
—<wsdl:part name="GetIdentifyResultsRequestparameters" element="GetIdentifyResultsRequest"
/>tns:GetIdentifyResults"/>
–</wsdl:message>
–<wsdl:message name="GetIdentifyResultsResponseMessage">
—<wsdl:part name="parameters" element="tns:GetIdentifyResponse" element="GetIdentifyResultsResponse"
/>"/>
–</wsdl:message>
–<wsdl:message name="GetVerifyResultsRequestMessage">
—<wsdl:part name="GetVerifyResultsRequestparameters" element="GetVerifyResultsRequest"
/>tns:GetVerifyResults"/>
–</wsdl:message>
–<wsdl:message name="GetVerifyResultsResponseMessage">
—<wsdl:part name="parameters" element="tns:GetVerifyResultsResponse" element="GetVerifyResultsResponse"
/>"/>
–</wsdl:message>
–<wsdl:message name="IdentifyRequestMessage">
—<wsdl:part name="IdentifyRequestparameters" element="IdentifyRequest" />tns:Identify"/>
–</wsdl:message>
–<wsdl:message name="IdentifyResponseMessage">
—<wsdl:part name="parameters" element="tns:IdentifyResponse" element="IdentifyResponse" />"/>
–</wsdl:message>
–<wsdl:message name="RetrieveInformationRequestMessage">
—<wsdl:part name="RetrieveInformationRequestparameters" element="RetrieveInformationRequest"
/>tns:RetrieveInformation"/>
–</wsdl:message>
–<wsdl:message name="RetrieveInformationResponseMessage">
—<wsdl:part name="parameters" element="tns:RetrieveInformationResponse"
element="RetrieveInformationResponse" />"/>
–</wsdl:message>
–<wsdl:message name="VerifyRequestMessage">
—<wsdl:part name="VerifyRequestparameters" element="VerifyRequest" />tns:Verify"/>
–</wsdl:message>
–<wsdl:message name="VerifyResponseMessage">
—<wsdl:part name="parameters" element="tns:VerifyResponse" element="VerifyResponse" />"/>
–</wsdl:message>
–<wsdl:portType name="BIAS_v1">
—<wsdl:operation name="AddSubjectToGallery">
—<wsdl:input name="AddSubjectToGallery" message="tns:AddSubjectToGalleryRequestMessage"
name="AddSubjectToGalleryRequest" />"/>
```


Copyright © OASIS Open 2009-2011. All Rights Reserved.— Standards Track Work Product

```
    <wsdl:output name="AddSubjectToGalleryResponse" message="tns:AddSubjectToGalleryResponseMessage"
    name="AddSubjectToGalleryResponse" />"/>
    <wsdl:fault name="BIASFault" message="tns:BIASFaultMessage"/>
  </wsdl:operation>
  <wsdl:operation name="CheckQuality">
    <wsdl:input name="CheckQuality" message="tns:CheckQualityRequestMessage" name="CheckQualityRequest"
    />"/>
    <wsdl:output name="CheckQualityResponse" message="tns:CheckQualityResponseMessage"
    name="CheckQualityResponse" />"/>
    <wsdl:fault name="BIASFault" message="tns:BIASFaultMessage"/>
  </wsdl:operation>
  <wsdl:operation name="ClassifyBiometricData">
    <wsdl:input name="ClassifyBiometricData" message="tns:ClassifyBiometricDataRequestMessage"
    name="ClassifyBiometricDataRequest" />"/>
    <wsdl:output name="ClassifyBiometricDataResponse" message="tns:ClassifyBiometricDataResponseMessage"
    name="ClassifyBiometricDataResponse" />"/>
    <wsdl:fault name="BIASFault" message="tns:BIASFaultMessage"/>
  </wsdl:operation>
  <wsdl:operation name="CreateSubject">
    <wsdl:input name="CreateSubject" message="tns:CreateSubjectRequestMessage" name="CreateSubjectRequest"
    />"/>
    <wsdl:output name="CreateSubjectResponse" message="tns:CreateSubjectResponseMessage"
    name="CreateSubjectResponse" />"/>
    <wsdl:fault name="BIASFault" message="tns:BIASFaultMessage"/>
  </wsdl:operation>
  <wsdl:operation name="DeleteBiographicData">
    <wsdl:input name="DeleteBiographicData" message="tns:DeleteBiographicDataRequestMessage"
    name="DeleteBiographicDataRequest" />"/>
    <wsdl:output name="DeleteBiographicDataResponse" message="tns:DeleteBiographicDataResponseMessage"
    name="DeleteBiographicDataResponse" />"/>
    <wsdl:fault name="BIASFault" message="tns:BIASFaultMessage"/>
  </wsdl:operation>
  <wsdl:operation name="DeleteBiometricData">
    <wsdl:input name="DeleteBiometricData" message="tns:DeleteBiometricDataRequestMessage"
    name="DeleteBiometricDataRequest" />"/>
    <wsdl:output name="DeleteBiometricDataResponse" message="tns:DeleteBiometricDataResponseMessage"
    name="DeleteBiometricDataResponse" />"/>
    <wsdl:fault name="BIASFault" message="tns:BIASFaultMessage"/>
  </wsdl:operation>
  <wsdl:operation name="DeleteSubject">
    <wsdl:input name="DeleteSubject" message="tns:DeleteSubjectRequestMessage" name="DeleteSubjectRequest"
    />"/>
```

Formatted: Space Before: 4 pt, After: 4 pt, Adjust space between Latin and Asian text, Adjust space between Asian text and numbers

Formatted: Space Before: 4 pt, After: 4 pt, Adjust space between Latin and Asian text, Adjust space between Asian text and numbers

Formatted: Space Before: 4 pt, After: 4 pt, Adjust space between Latin and Asian text, Adjust space between Asian text and numbers

Formatted: Space Before: 4 pt, After: 4 pt, Adjust space between Latin and Asian text, Adjust space between Asian text and numbers

Formatted: Space Before: 4 pt, After: 4 pt, Adjust space between Latin and Asian text, Adjust space between Asian text and numbers

Copyright © OASIS Open 2009-2011. All Rights Reserved.

```
    <wsdl:output name="DeleteSubjectResponse" message="tns:DeleteSubjectResponseMessage"
    name="DeleteSubjectResponse" />"/>
    <wsdl:fault name="BIASFault" message="tns:BIASFaultMessage"/>
  </wsdl:operation>
  <wsdl:operation name="DeleteSubjectFromGallery">
    <wsdl:input name="DeleteSubjectFromGallery" message="tns:DeleteSubjectFromGalleryRequestMessage"
    name="DeleteSubjectFromGalleryRequest" />"/>
    <wsdl:output name="DeleteSubjectFromGalleryResponse"
  message="tns:DeleteSubjectFromGalleryResponseMessage" name="DeleteSubjectFromGalleryResponse" />"/>
    <wsdl:fault name="BIASFault" message="tns:BIASFaultMessage"/>
  </wsdl:operation>
  <wsdl:operation name="GetIdentifySubjectResults">
    <wsdl:input name="GetIdentifySubjectResults" message="tns:GetIdentifySubjectResultsRequestMessage"
    name="GetIdentifySubjectResultsRequest" />"/>
    <wsdl:output name="GetIdentifySubjectResultsResponse"
  message="tns:GetIdentifySubjectResultsResponseMessage" name="GetIdentifySubjectResultsResponse" />"/>
    <wsdl:fault name="BIASFault" message="tns:BIASFaultMessage"/>
  </wsdl:operation>
  <wsdl:operation name="IdentifySubject">
    <wsdl:input name="IdentifySubject" message="tns:IdentifySubjectRequestMessage"
    name="IdentifySubjectRequest" />"/>
    <wsdl:output name="IdentifySubjectResponse" message="tns:IdentifySubjectResponseMessage"
    name="IdentifySubjectResponse" />"/>
    <wsdl:fault name="BIASFault" message="tns:BIASFaultMessage"/>
  </wsdl:operation>
  <wsdl:operation name="ListBiographicData">
    <wsdl:input name="ListBiographicData" message="tns:ListBiographicDataRequestMessage"
    name="ListBiographicDataRequest" />"/>
    <wsdl:output name="ListBiographicDataResponse" message="tns:ListBiographicDataResponseMessage"
    name="ListBiographicDataResponse" />"/>
    <wsdl:fault name="BIASFault" message="tns:BIASFaultMessage"/>
  </wsdl:operation>
  <wsdl:operation name="ListBiometricData">
    <wsdl:input name="ListBiometricData" message="tns:ListBiometricDataRequestMessage"
    name="ListBiometricDataRequest" />"/>
    <wsdl:output name="ListBiometricDataResponse" message="tns:ListBiometricDataResponseMessage"
    name="ListBiometricDataResponse" />"/>
    <wsdl:fault name="BIASFault" message="tns:BIASFaultMessage"/>
  </wsdl:operation>
  <wsdl:operation name="PerformFusion">
    <wsdl:input name="PerformFusion" message="tns:PerformFusionRequestMessage"
    name="PerformFusionRequest" />"/>
```

Formatted: Space Before: 4 pt, After: 4 pt, Adjust space between Latin and Asian text, Adjust space between Asian text and numbers

Copyright © OASIS Open 2009-2011. All Rights Reserved. Standards Track Work Product

```
    <wsdl:output name="PerformFusionResponse" message="tns:PerformFusionResponseMessage"
    name="PerformFusionResponse" />"/>
    <wsdl:fault name="BIASFault" message="tns:BIASFaultMessage"/>
  </wsdl:operation>
  <wsdl:operation name="QueryCapabilities">
    <wsdl:input name="QueryCapabilities" message="tns:QueryCapabilitiesRequestMessage"
    name="QueryCapabilitiesRequest" />"/>
    <wsdl:output name="QueryCapabilitiesResponse" message="tns:QueryCapabilitiesResponseMessage"
    name="QueryCapabilitiesResponse" />"/>
    <wsdl:fault name="BIASFault" message="tns:BIASFaultMessage"/>
  </wsdl:operation>
  <wsdl:operation name="RetrieveBiographicInformation">
    <wsdl:input name="RetrieveBiographicInformation"
    message="tns:RetrieveBiographicInformationRequestMessage" name="RetrieveBiographicInformationRequest" />"/>
    <wsdl:output name="RetrieveBiographicInformationResponse"
    message="tns:RetrieveBiographicInformationResponseMessage" name="RetrieveBiographicInformationResponse"
    />"/>
    <wsdl:fault name="BIASFault" message="tns:BIASFaultMessage"/>
  </wsdl:operation>
  <wsdl:operation name="RetrieveBiometricInformation">
    <wsdl:input name="RetrieveBiometricInformation" message="tns:RetrieveBiometricInformationRequestMessage"
    name="RetrieveBiometricInformationRequest" />"/>
    <wsdl:output name="RetrieveBiometricInformationResponse"
    message="tns:RetrieveBiometricInformationResponseMessage" name="RetrieveBiometricInformationResponse"
    />"/>
    <wsdl:fault name="BIASFault" message="tns:BIASFaultMessage"/>
  </wsdl:operation>
  <wsdl:operation name="SetBiographicData">
    <wsdl:input name="SetBiographicData" message="tns:SetBiographicDataRequestMessage"
    name="SetBiographicDataRequest" />"/>
    <wsdl:output name="SetBiographicDataResponse" message="tns:SetBiographicDataResponseMessage"
    name="SetBiographicDataResponse" />"/>
    <wsdl:fault name="BIASFault" message="tns:BIASFaultMessage"/>
  </wsdl:operation>
  <wsdl:operation name="SetBiometricData">
    <wsdl:input name="SetBiometricData" message="tns:SetBiometricDataRequestMessage"
    name="SetBiometricDataRequest" />"/>
    <wsdl:output name="SetBiometricDataResponse" message="tns:SetBiometricDataResponseMessage"
    name="SetBiometricDataResponse" />"/>
    <wsdl:fault name="BIASFault" message="tns:BIASFaultMessage"/>
  </wsdl:operation>
  <wsdl:operation name="TransformBiometricData">
```

Formatted: Space Before: 4 pt, After: 4 pt, Adjust space between Latin and Asian text, Adjust space between Asian text and numbers

Formatted: Space Before: 4 pt, After: 4 pt, Adjust space between Latin and Asian text, Adjust space between Asian text and numbers

Formatted: Space Before: 4 pt, After: 4 pt, Adjust space between Latin and Asian text, Adjust space between Asian text and numbers

Formatted: Space Before: 4 pt, After: 4 pt, Adjust space between Latin and Asian text, Adjust space between Asian text and numbers

Formatted: Space Before: 4 pt, After: 4 pt, Adjust space between Latin and Asian text, Adjust space between Asian text and numbers

Copyright © OASIS Open 2009-2011. All Rights Reserved.

```
    <wsdl:input name="TransformBiometricData" message="tns:TransformBiometricDataRequestMessage"
name="TransformBiometricDataRequest" />"/>
    <wsdl:output name="TransformBiometricDataResponse"
message="tns:TransformBiometricDataResponseMessage" name="TransformBiometricDataResponse" />"/>
    <wsdl:fault name="BIASFault" message="tns:BIASFaultMessage"/>
  </wsdl:operation>
  <wsdl:operation name="UpdateBiographicData">
    <wsdl:input name="UpdateBiographicData" message="tns:UpdateBiographicDataRequestMessage"
name="UpdateBiographicDataRequest" />"/>
    <wsdl:output name="UpdateBiographicDataResponse" message="tns:UpdateBiographicDataResponseMessage"
name="UpdateBiographicDataResponse" />"/>
    <wsdl:fault name="BIASFault" message="tns:BIASFaultMessage"/>
  </wsdl:operation>
  <wsdl:operation name="UpdateBiometricData">
    <wsdl:input name="UpdateBiometricData" message="tns:UpdateBiometricDataRequestMessage"
name="UpdateBiometricDataRequest" />"/>
    <wsdl:output name="UpdateBiometricDataResponse" message="tns:UpdateBiometricDataResponseMessage"
name="UpdateBiometricDataResponse" />"/>
    <wsdl:fault name="BIASFault" message="tns:BIASFaultMessage"/>
  </wsdl:operation>
  <wsdl:operation name="VerifySubject">
    <wsdl:input name="VerifySubject" message="tns:VerifySubjectRequestMessage" name="VerifySubjectRequest"
/>"/>
    <wsdl:output name="VerifySubjectResponse" message="tns:VerifySubjectResponseMessage"
name="VerifySubjectResponse" />"/>
    <wsdl:fault name="BIASFault" message="tns:BIASFaultMessage"/>
  </wsdl:operation>
  <wsdl:operation name="Enroll">
    <wsdl:input name="Enroll" message="tns:EnrollRequestMessage" name="EnrollRequest" />"/>
    <wsdl:output name="EnrollResponse" message="tns:EnrollResponseMessage" name="EnrollResponse" />"/>
    <wsdl:fault name="BIASFault" message="tns:BIASFaultMessage"/>
  </wsdl:operation>
  <wsdl:operation name="GetEnrollResults">
    <wsdl:input name="GetEnrollResults" message="tns:GetEnrollResultsRequestMessage"
name="GetEnrollResultsRequest" />"/>
    <wsdl:output name="GetEnrollResultsResponse" message="tns:GetEnrollResultsResponseMessage"
name="GetEnrollResultsResponse" />"/>
    <wsdl:fault name="BIASFault" message="tns:BIASFaultMessage"/>
  </wsdl:operation>
  <wsdl:operation name="GetIdentifyResults">
    <wsdl:input name="GetIdentifyResults" message="tns:GetIdentifyResultsRequestMessage"
name="GetIdentifyResultsRequest" />"/>
```

Formatted: Space Before: 4 pt, After: 4 pt, Adjust space between Latin and Asian text, Adjust space between Asian text and numbers

Formatted: Space Before: 4 pt, After: 4 pt, Adjust space between Latin and Asian text, Adjust space between Asian text and numbers

Formatted: Space Before: 4 pt, After: 4 pt, Adjust space between Latin and Asian text, Adjust space between Asian text and numbers

Formatted: Space Before: 4 pt, After: 4 pt, Adjust space between Latin and Asian text, Adjust space between Asian text and numbers

Formatted: Space Before: 4 pt, After: 4 pt, Adjust space between Latin and Asian text, Adjust space between Asian text and numbers

Formatted: Space Before: 4 pt, After: 4 pt, Adjust space between Latin and Asian text, Adjust space between Asian text and numbers

Copyright © OASIS Open 2009-2011. All Rights Reserved.

```
    <wsdl:output name="GetIdentifyResultsResponse" message="tns:GetIdentifyResultsResponseMessage"
    name="GetIdentifyResultsResponse" />"/>
    <wsdl:fault name="BIASFault" message="tns:BIASFaultMessage"/>
  </wsdl:operation>
  <wsdl:operation name="GetVerifyResults">
    <wsdl:input name="GetVerifyResults" message="tns:GetVerifyResultsRequestMessage"
    name="GetVerifyResultsRequest" />"/>
    <wsdl:output name="GetVerifyResultsResponse" message="tns:GetVerifyResultsResponseMessage"
    name="GetVerifyResultsResponse" />"/>
    <wsdl:fault name="BIASFault" message="tns:BIASFaultMessage"/>
  </wsdl:operation>
  <wsdl:operation name="Identify">
    <wsdl:input name="Identify" message="tns:IdentifyRequestMessage" name="IdentifyRequest" />"/>
    <wsdl:output name="IdentifyResponse" message="tns:IdentifyResponseMessage" name="IdentifyResponse" />"/>
    <wsdl:fault name="BIASFault" message="tns:BIASFaultMessage"/>
  </wsdl:operation>
  <wsdl:operation name="RetrieveInformation">
    <wsdl:input name="RetrieveInformation" message="tns:RetrieveInformationRequestMessage"
    name="RetrieveInformationRequest" />"/>
    <wsdl:output name="RetrieveInformationResponse" message="tns:RetrieveInformationResponseMessage"
    name="RetrieveInformationResponse" />"/>
    <wsdl:fault name="BIASFault" message="tns:BIASFaultMessage"/>
  </wsdl:operation>
  <wsdl:operation name="Verify">
    <wsdl:input name="Verify" message="tns:VerifyRequestMessage" name="VerifyRequest" />"/>
    <wsdl:output name="VerifyResponse" message="tns:VerifyResponseMessage" name="VerifyResponse" />"/>
    <wsdl:fault name="BIASFault" message="tns:BIASFaultMessage"/>
  </wsdl:operation>
 </wsdl:portType>
 <wsdl:binding type="tns:BIAS_v1" name="BIAS_v1HttpBinding" type="tns:BIAS_v1">
  <soap:binding style="document" transport="http://schemas.xmlsoap.org/soap/http" />"/>
  <wsdl:operation name="AddSubjectToGallery">
    <soap:operation soapAction="AddSubjectToGallery" />"/>
    <wsdl:input name="AddSubjectToGalleryRequestAddSubjectToGallery">
      <soap:body use="literal" />"/>
    </wsdl:input>
    <wsdl:output name="AddSubjectToGalleryResponse">
      <soap:body use="literal" />"/>
    </wsdl:output>
    <wsdl:fault name="=" ="BIASFault" />">
```

Formatted: Space Before: 4 pt, After: 4 pt, Adjust space between Latin and Asian text, Adjust space between Asian text and numbers

Formatted: Space Before: 4 pt, After: 4 pt, Adjust space between Latin and Asian text, Adjust space between Asian text and numbers

Formatted: Space Before: 4 pt, After: 4 pt, Adjust space between Latin and Asian text, Adjust space between Asian text and numbers

Formatted: Space Before: 4 pt, After: 4 pt, Adjust space between Latin and Asian text, Adjust space between Asian text and numbers

Formatted: Space Before: 4 pt, After: 4 pt, Adjust space between Latin and Asian text, Adjust space between Asian text and numbers

Copyright © OASIS Open 2009-2011. All Rights Reserved. Standards Track Work Product

```
4278        <soap:fault name="" use="literal" />
4279      </wsdl:fault>
4280    </wsdl:operation>
4281    <wsdl:operation name="CheckQuality">
4282      <soap:operation soapAction="CheckQuality" />
4283      <wsdl:input name="CheckQualityRequestCheckQuality">
4284        <soap:body use="literal" />
4285      </wsdl:input>
4286      <wsdl:output name="CheckQualityResponse">
4287        <soap:body use="literal" />
4288      </wsdl:output>
4289      <wsdl:fault name="" >
4290        <soap:fault name="" use="literal" />
4291      </wsdl:fault>
4292    </wsdl:operation>
4293    <wsdl:operation name="ClassifyBiometricData">
4294      <soap:operation soapAction="ClassifyBiometricData" />
4295      <wsdl:input name="ClassifyBiometricDataRequestClassifyBiometricData">
4296        <soap:body use="literal" />
4297      </wsdl:input>
4298      <wsdl:output name="ClassifyBiometricDataResponse">
4299        <soap:body use="literal" />
4300      </wsdl:output>
4301      <wsdl:fault name="" >
4302        <soap:fault name="" use="literal" />
4303      </wsdl:fault>
4304    </wsdl:operation>
4305    <wsdl:operation name="CreateSubject">
4306      <soap:operation soapAction="CreateSubject" />
4307      <wsdl:input name="CreateSubjectRequestCreateSubject">
4308        <soap:body use="literal" />
4309      </wsdl:input>
4310      <wsdl:output name="CreateSubjectResponse">
4311        <soap:body use="literal" />
4312      </wsdl:output>
4313      <wsdl:fault name="" >
4314        <soap:fault name="" use="literal" />
4315      </wsdl:fault>
4316    </wsdl:operation>
```


Copyright © OASIS Open 2009-2011. All Rights Reserved.

```
—<wsdl:operation name="DeleteBiographicData">
——<soap:operation soapAction="DeleteBiographicData" />"/>
——<wsdl:input name="DeleteBiographicDataRequestDeleteBiographicData">
———<soap:body use="literal" />"/>
——</wsdl:input>
——<wsdl:output name="DeleteBiographicDataResponse">
———<soap:body use="literal" />"/>
——</wsdl:output>
——<wsdl:fault name="="BIASFault" />">
———<soap:fault name="="BIASFault"" use="="literal" />"/>
——</wsdl:fault>
—</wsdl:operation>
—<wsdl:operation name="DeleteBiometricData">
——<soap:operation soapAction="DeleteBiometricData" />"/>
——<wsdl:input name="DeleteBiometricDataRequestDeleteBiometricData">
———<soap:body use="literal" />"/>
——</wsdl:input>
——<wsdl:output name="DeleteBiometricDataResponse">
———<soap:body use="literal" />"/>
——</wsdl:output>
——<wsdl:fault name="="BIASFault" />">
———<soap:fault name="="BIASFault"" use="="literal" />"/>
——</wsdl:fault>
—</wsdl:operation>
—<wsdl:operation name="DeleteSubject">
——<soap:operation soapAction="DeleteSubject" />"/>
——<wsdl:input name="DeleteSubjectRequestDeleteSubject">
———<soap:body use="literal" />"/>
——</wsdl:input>
——<wsdl:output name="DeleteSubjectResponse">
———<soap:body use="literal" />"/>
——</wsdl:output>
——<wsdl:fault name="="BIASFault" />">
———<soap:fault name="="BIASFault"" use="="literal" />"/>
——</wsdl:fault>
—</wsdl:operation>
—<wsdl:operation name="DeleteSubjectFromGallery">
——<soap:operation soapAction="DeleteSubjectFromGallery" />"/>
——<wsdl:input name="DeleteSubjectFromGalleryRequestDeleteSubjectFromGallery">
```


Copyright © OASIS Open 2009-2011. All Rights Reserved.— Standards Track Work Product

```
      <soap:body use="literal" />
    </wsdl:input>
    <wsdl:output name="DeleteSubjectFromGalleryResponse">
      <soap:body use="literal" />
    </wsdl:output>
    <wsdl:fault name="" />
      <soap:fault name="" use="literal" />
    </wsdl:fault>
  </wsdl:operation>
  <wsdl:operation name="GetIdentifySubjectResults">
    <soap:operation soapAction="GetIdentifySubjectResults" />
    <wsdl:input name="GetIdentifySubjectResultsRequestGetIdentifySubjectResults">
      <soap:body use="literal" />
    </wsdl:input>
    <wsdl:output name="GetIdentifySubjectResultsResponse">
      <soap:body use="literal" />
    </wsdl:output>
    <wsdl:fault name="" />
      <soap:fault name="" use="literal" />
    </wsdl:fault>
  </wsdl:operation>
  <wsdl:operation name="IdentifySubject">
    <soap:operation soapAction="IdentifySubject" />
    <wsdl:input name="IdentifySubjectRequestIdentifySubject">
      <soap:body use="literal" />
    </wsdl:input>
    <wsdl:output name="IdentifySubjectResponse">
      <soap:body use="literal" />
    </wsdl:output>
    <wsdl:fault name="" />
      <soap:fault name="" use="literal" />
    </wsdl:fault>
  </wsdl:operation>
  <wsdl:operation name="ListBiographicData">
    <soap:operation soapAction="ListBiographicData" />
    <wsdl:input name="ListBiographicDataRequestListBiographicData">
      <soap:body use="literal" />
    </wsdl:input>
    <wsdl:output name="ListBiographicDataResponse">
```


Copyright © OASIS Open 2009-2011. All Rights Reserved.

```
      <soap:body use="literal" />
    </wsdl:output>
    <wsdl:fault name="BIASFault">
      <soap:fault name="BIASFault" use="literal" />
    </wsdl:fault>
  </wsdl:operation>
  <wsdl:operation name="ListBiometricData">
    <soap:operation soapAction="ListBiometricData" />
    <wsdl:input name="ListBiometricDataRequestListBiometricData">
      <soap:body use="literal" />
    </wsdl:input>
    <wsdl:output name="ListBiometricDataResponse">
      <soap:body use="literal" />
    </wsdl:output>
    <wsdl:fault name="BIASFault">
      <soap:fault name="BIASFault" use="literal" />
    </wsdl:fault>
  </wsdl:operation>
  <wsdl:operation name="PerformFusion">
    <soap:operation soapAction="PerformFusion" />
    <wsdl:input name="PerformFusionRequestPerformFusion">
      <soap:body use="literal" />
    </wsdl:input>
    <wsdl:output name="PerformFusionResponse">
      <soap:body use="literal" />
    </wsdl:output>
    <wsdl:fault name="BIASFault">
      <soap:fault name="BIASFault" use="literal" />
    </wsdl:fault>
  </wsdl:operation>
  <wsdl:operation name="QueryCapabilities">
    <soap:operation soapAction="QueryCapabilities" />
    <wsdl:input name="QueryCapabilitiesRequestQueryCapabilities">
      <soap:body use="literal" />
    </wsdl:input>
    <wsdl:output name="QueryCapabilitiesResponse">
      <soap:body use="literal" />
    </wsdl:output>
    <wsdl:fault name="BIASFault">
```


Copyright © OASIS Open 2009-2011. All Rights Reserved.

```
    <soap:fault name="BIASFault" use="literal"/>
    </wsdl:fault>
  </wsdl:operation>
  <wsdl:operation name="RetrieveBiographicInformation">
    <soap:operation soapAction="RetrieveBiographicInformation"/>
    <wsdl:input name="RetrieveBiographicInformationRequestRetrieveBiographicInformation">
      <soap:body use="literal"/>
    </wsdl:input>
    <wsdl:output name="RetrieveBiographicInformationResponse">
      <soap:body use="literal"/>
    </wsdl:output>
    <wsdl:fault name="BIASFault">
      <soap:fault name="BIASFault" use="literal"/>
    </wsdl:fault>
  </wsdl:operation>
  <wsdl:operation name="RetrieveBiometricInformation">
    <soap:operation soapAction="RetrieveBiometricInformation"/>
    <wsdl:input name="RetrieveBiometricInformationRequestRetrieveBiometricInformation">
      <soap:body use="literal"/>
    </wsdl:input>
    <wsdl:output name="RetrieveBiometricInformationResponse">
      <soap:body use="literal"/>
    </wsdl:output>
    <wsdl:fault name="BIASFault">
      <soap:fault name="BIASFault" use="literal"/>
    </wsdl:fault>
  </wsdl:operation>
  <wsdl:operation name="SetBiographicData">
    <soap:operation soapAction="SetBiographicData"/>
    <wsdl:input name="SetBiographicDataRequestSetBiographicData">
      <soap:body use="literal"/>
    </wsdl:input>
    <wsdl:output name="SetBiographicDataResponse">
      <soap:body use="literal"/>
    </wsdl:output>
    <wsdl:fault name="BIASFault">
      <soap:fault name="BIASFault" use="literal"/>
    </wsdl:fault>
  </wsdl:operation>
```


Copyright © OASIS Open 2009-2011. All Rights Reserved.

```
<wsdl:operation name="SetBiometricData">
<soap:operation soapAction="SetBiometricData" />"/>
<wsdl:input name="SetBiometricDataRequestSetBiometricData">
<soap:body use="literal" />"/>
</wsdl:input>
<wsdl:output name="SetBiometricDataResponse">
<soap:body use="literal" />"/>
</wsdl:output>
<wsdl:fault name="="BIASFault">">
<soap:fault name="="BIASFault"" use="="literal" />"/>
</wsdl:fault>
</wsdl:operation>
<wsdl:operation name="TransformBiometricData">
<soap:operation soapAction="TransformBiometricData" />"/>
<wsdl:input name="TransformBiometricDataRequestTransformBiometricData">
<soap:body use="literal" />"/>
</wsdl:input>
<wsdl:output name="TransformBiometricDataResponse">
<soap:body use="literal" />"/>
</wsdl:output>
<wsdl:fault name="="BIASFault">">
<soap:fault name="="BIASFault"" use="="literal" />"/>
</wsdl:fault>
</wsdl:operation>
<wsdl:operation name="UpdateBiographicData">
<soap:operation soapAction="UpdateBiographicData" />"/>
<wsdl:input name="UpdateBiographicDataRequestUpdateBiographicData">
<soap:body use="literal" />"/>
</wsdl:input>
<wsdl:output name="UpdateBiographicDataResponse">
<soap:body use="literal" />"/>
</wsdl:output>
<wsdl:fault name="="BIASFault">">
<soap:fault name="="BIASFault"" use="="literal" />"/>
</wsdl:fault>
</wsdl:operation>
<wsdl:operation name="UpdateBiometricData">
<soap:operation soapAction="UpdateBiometricData" />"/>
<wsdl:input name="UpdateBiometricDataRequestUpdateBiometricData">
```


Copyright © OASIS Open 2009-2011. All Rights Reserved. Standards Track Work Product

```
      <soap:body use="literal" />
    </wsdl:input>
    <wsdl:output name="UpdateBiometricDataResponse">
      <soap:body use="literal" />
    </wsdl:output>
    <wsdl:fault name="" />
      <soap:fault name="" use="literal" />
    </wsdl:fault>
  </wsdl:operation>
  <wsdl:operation name="VerifySubject">
    <soap:operation soapAction="VerifySubject" />
    <wsdl:input name="VerifySubjectRequestVerifySubject">
      <soap:body use="literal" />
    </wsdl:input>
    <wsdl:output name="VerifySubjectResponse">
      <soap:body use="literal" />
    </wsdl:output>
    <wsdl:fault name="" />
      <soap:fault name="" use="literal" />
    </wsdl:fault>
  </wsdl:operation>
  <wsdl:operation name="Enroll">
    <soap:operation soapAction="Enroll" />
    <wsdl:input name="EnrollRequestEnroll">
      <soap:body use="literal" />
    </wsdl:input>
    <wsdl:output name="EnrollResponse">
      <soap:body use="literal" />
    </wsdl:output>
    <wsdl:fault name="" />
      <soap:fault name="" use="literal" />
    </wsdl:fault>
  </wsdl:operation>
  <wsdl:operation name="GetEnrollResults">
    <soap:operation soapAction="GetEnrollResults" />
    <wsdl:input name="GetEnrollResultsRequestGetEnrollResults">
      <soap:body use="literal" />
    </wsdl:input>
    <wsdl:output name="GetEnrollResultsResponse">
```


Copyright © OASIS Open 2009-2011. All Rights Reserved. Standards Track Work Product

```
——<soap:body use="literal" />"/>
——</wsdl:output>
——<wsdl:fault name=" ="BIASFault" >">
——<soap:fault name=" ="BIASFault" " use=" ="literal" />"/>
——</wsdl:fault>
—</wsdl:operation>
—<wsdl:operation name="GetIdentifyResults">
——<soap:operation soapAction="GetIdentifyResults" />"/>
——<wsdl:input name="GetIdentifyResultsRequestGetIdentifyResults">
——<soap:body use="literal" />"/>
——</wsdl:input>
——<wsdl:output name="GetIdentifyResultsResponse">
——<soap:body use="literal" />"/>
——</wsdl:output>
——<wsdl:fault name=" ="BIASFault" >">
——<soap:fault name=" ="BIASFault" " use=" ="literal" />"/>
——</wsdl:fault>
—</wsdl:operation>
—<wsdl:operation name="GetVerifyResults">
——<soap:operation soapAction="GetVerifyResults" />"/>
——<wsdl:input name="GetVerifyResultsRequestGetVerifyResults">
——<soap:body use="literal" />"/>
——</wsdl:input>
——<wsdl:output name="GetVerifyResultsResponse">
——<soap:body use="literal" />"/>
——</wsdl:output>
——<wsdl:fault name=" ="BIASFault" >">
——<soap:fault name=" ="BIASFault" " use=" ="literal" />"/>
——</wsdl:fault>
—</wsdl:operation>
—<wsdl:operation name="Identify">
——<soap:operation soapAction="Identify" />"/>
——<wsdl:input name="IdentifyRequestIdentify">
——<soap:body use="literal" />"/>
——</wsdl:input>
——<wsdl:output name="IdentifyResponse">
——<soap:body use="literal" />"/>
——</wsdl:output>
——<wsdl:fault name=" ="BIASFault" >">
```


Copyright © OASIS Open 2009-2011. All Rights Reserved.— Standards Track Work Product

```
        <soap:fault name="BIASFault" use="literal" />
      </wsdl:fault>
    </wsdl:operation>
    <wsdl:operation name="RetrieveInformation">
      <soap:operation soapAction="RetrieveInformation" />
      <wsdl:input name="RetrieveInformationRequestRetrieveInformation">
        <soap:body use="literal" />
      </wsdl:input>
      <wsdl:output name="RetrieveInformationResponse">
        <soap:body use="literal" />
      </wsdl:output>
      <wsdl:fault name="BIASFault">
        <soap:fault name="BIASFault" use="literal" />
      </wsdl:fault>
    </wsdl:operation>
    <wsdl:operation name="Verify">
      <soap:operation soapAction="Verify" />
      <wsdl:input name="VerifyRequestVerify">
        <soap:body use="literal" />
      </wsdl:input>
      <wsdl:output name="VerifyResponse">
        <soap:body use="literal" />
      </wsdl:output>
      <wsdl:fault name="BIASFault">
        <soap:fault name="BIASFault" use="literal" />
      </wsdl:fault>
    </wsdl:operation>
  </wsdl:binding>
  <wsdl:service name="BIAS_v1">
    <wsdl:port name="BIAS_v1HttpBindingPort" binding="tns:BIAS_v1HttpBinding">
      <soap:address location="http://your_URI/IRI_to_your_BIAS_implementation" />
    </wsdl:port>
  </wsdl:service>
</wsdl:definitions>
```


Copyright © OASIS Open 2009-2011. All Rights Reserved.

Annex B. Use Cases (non-normative)

The intent of this annex is to provide operational sequence diagrams / flow charts that show how the higher level usage scenarios within ~~[INCITS-BIAS]~~[INCITS-BIAS] could be implemented using the BIAS SOAP profile. The following use cases are given:

- Verification (synchronous/aggregate)
- Verification (asynchronous/aggregate)
- Verification (primitive)
- Identification (primitive)
- Enrollment (aggregate)
- Enrollment (primitive)

B.1 Verification Use Case

This use case uses the aggregate Verify operation in which a single request results in some set of operations (in this case, a series of primitive BIAS operations) being performed by the BIAS service provider.

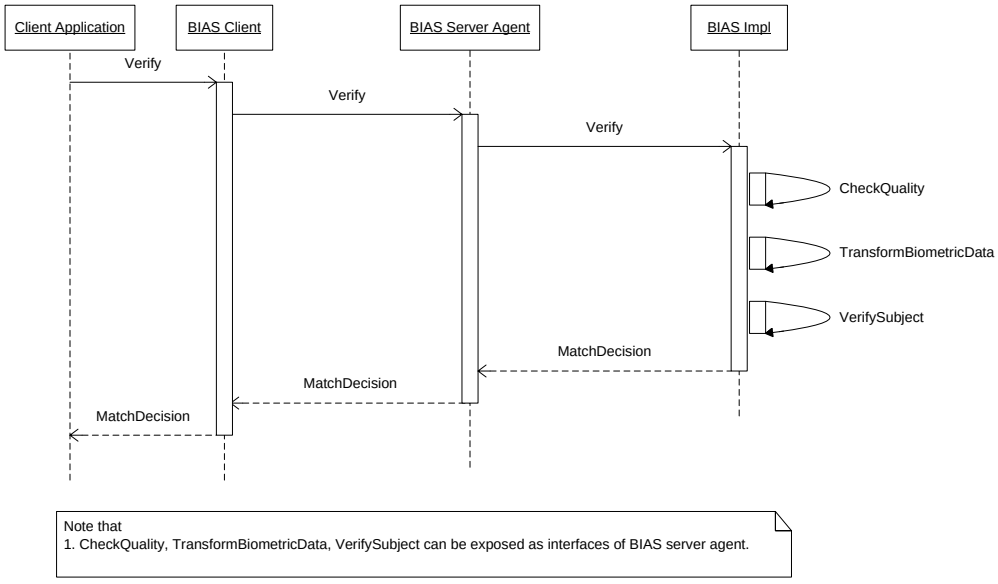

Copyright © OASIS Open 2009-2011. All Rights Reserved.

B.2 Asynchronous Verification Use Case

In this use case, the requester issues two requests – the BIAS Verify request to initiate the operation followed by a BIAS GetVerifyResult request to retrieve the results of that operation.

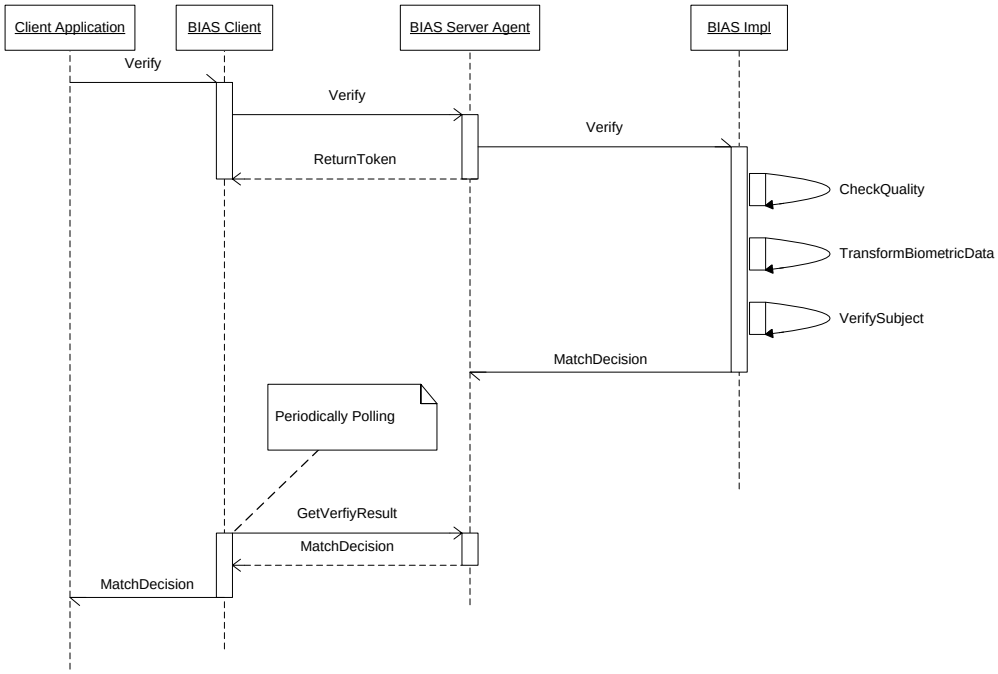

Note that
1. CheckQuality, TransformBiometricData, VerifySubject can be exposed as interfaces of BIAS server agent.

Copyright © OASIS Open 2009-2011. All Rights Reserved.

B.3 Primitive Verification Use Case

In this use case, the verification operation is performed as a series of requests using the BIAS primitive operations. In this case, the client rather than the service provider controls the workflow of the higher level operation.

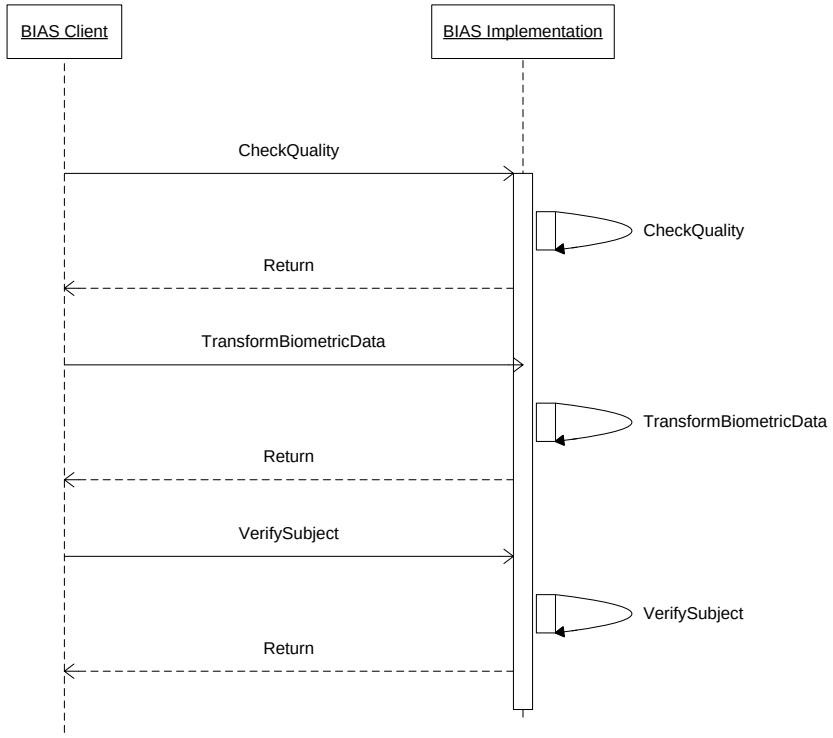

Copyright © OASIS Open 2009-2011. All Rights Reserved.

B.4 Identification Use Case

This use case uses the aggregate Identify operation in which a single request results in some set of operations (in this case, a series of primitive BIAS operations) being performed by the BIAS service provider.

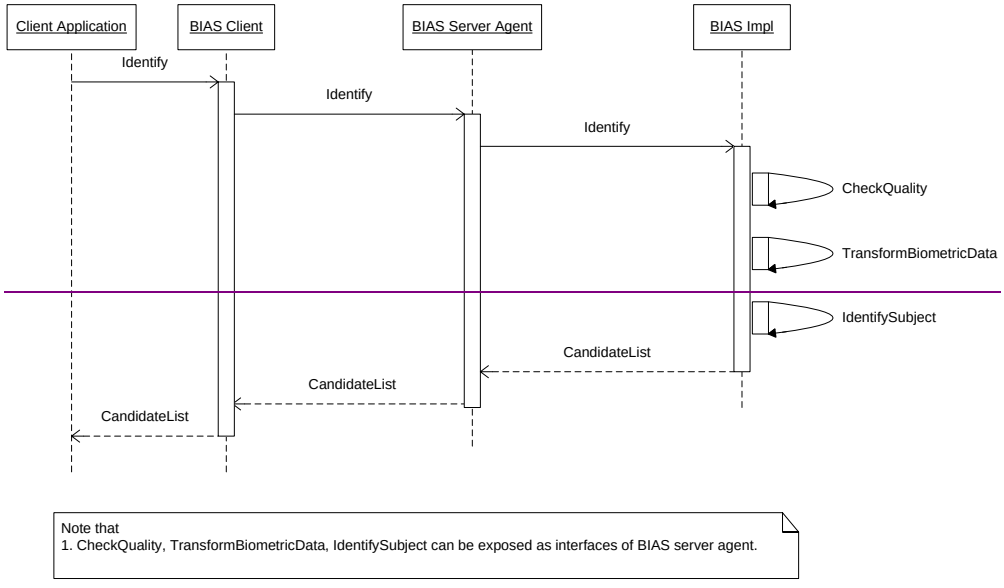

Copyright © OASIS Open 2009-2011. All Rights Reserved.

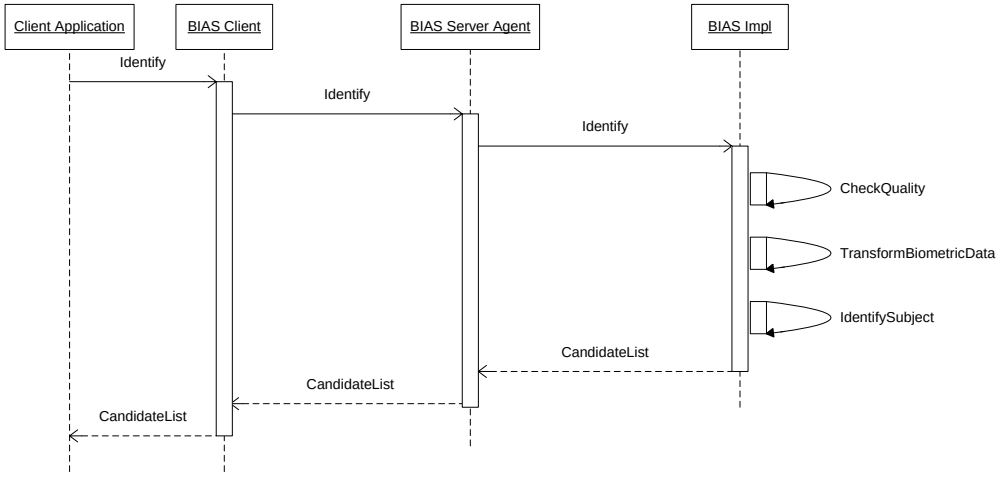

4665

4666

Copyright © OASIS Open 2009-2011. All Rights Reserved.

B.5 Biometric Enrollment Use Case

This use case uses the aggregate Enroll operation in which a single request results in some set of operations (in this case, a series of primitive BIAS operations) being performed by the BIAS service provider.

Here, if the result of the IdentifySubject is no matches found, then the subject is added to the gallery. If a match had been found then other logic may have been applied (e.g., return candidate list, add encounter for existing subject, etc.).

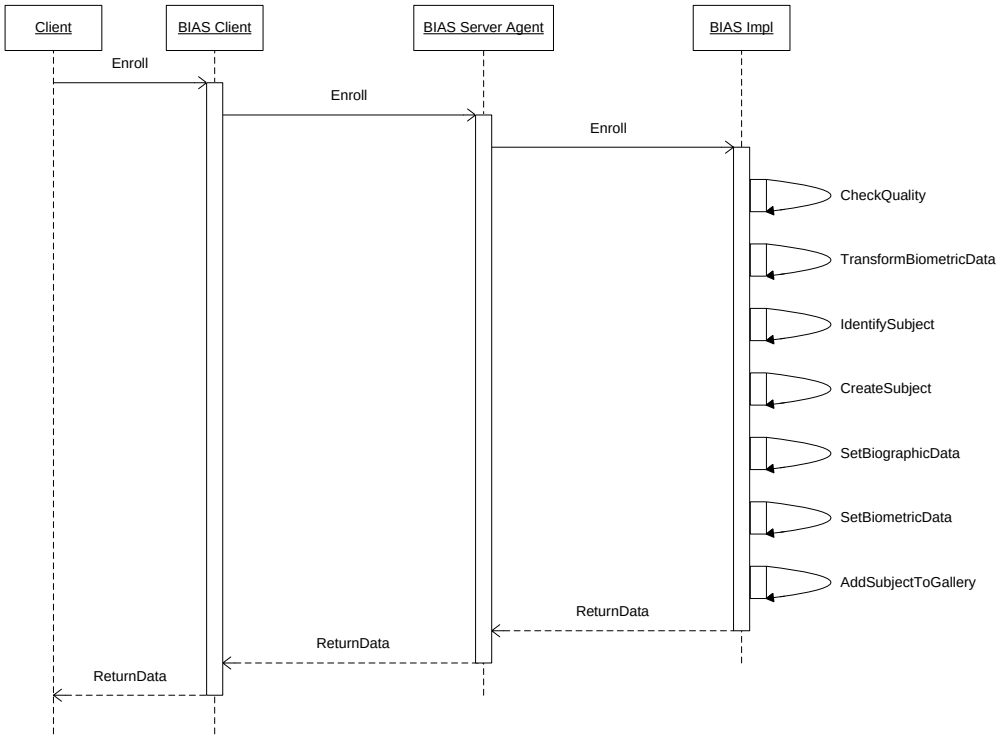

Copyright © OASIS Open 2009-2011. All Rights Reserved.

B.6 Primitive Enrollment Use Case

In this use case, the enrollment operation is performed as a series of requests using the BIAS primitive operations. In this case, the client rather than the service provider controls the workflow of the higher level operation.

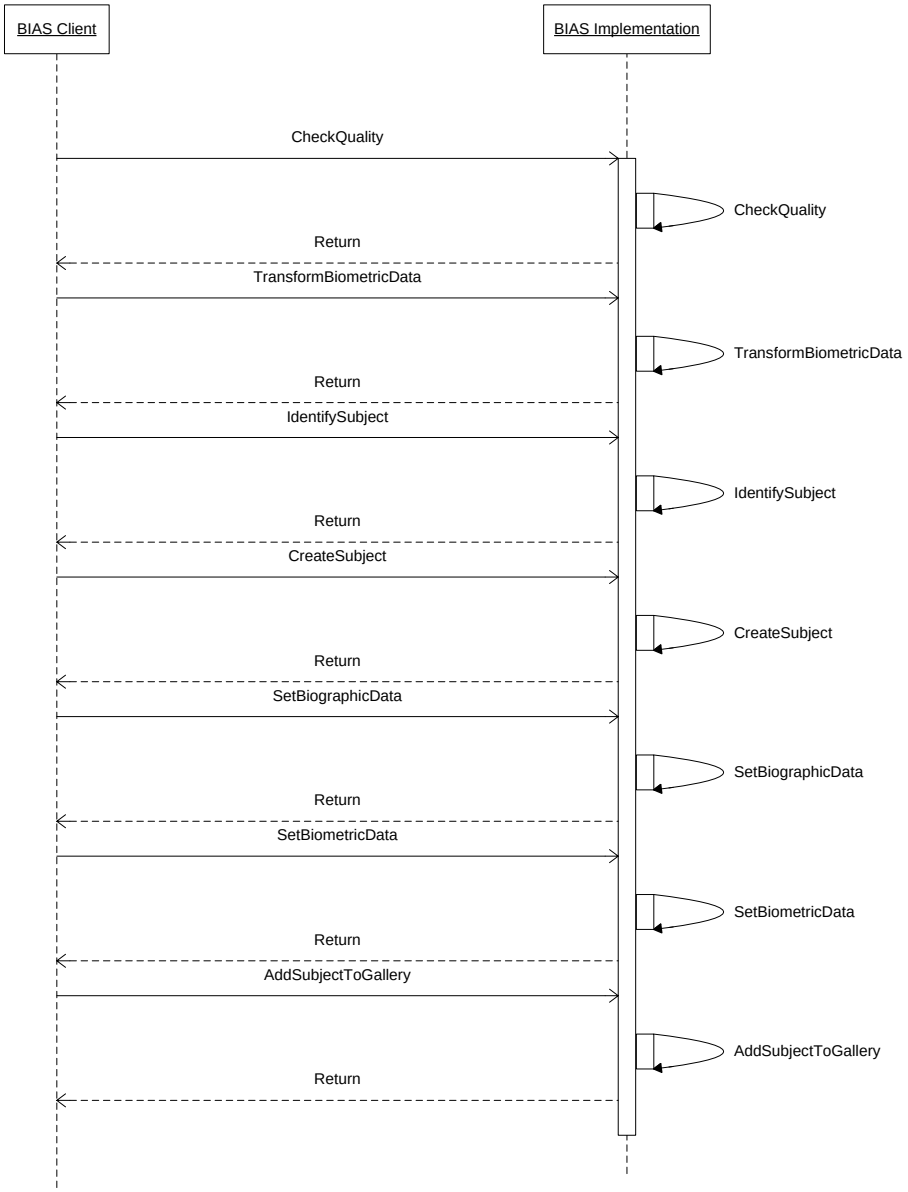

Copyright © OASIS Open 2009-2011. All Rights Reserved.

Annex C. Samples (non-normative)

C.1 Create Subject Request/Response Example

INCITS BIAS Specification

```
<interface name="CreateSubject">
     <parameter name="SubjectID" type="xs:string" direction="inout"
use="optional" />
     <parameter name="Return" type="xs:unsignedLong" direction="out" />
</interface>
```

OASIS BIAS Examples

Simple Create Subject Request:

```
POST /bias HTTP/1.1
Host: www.acme.com
Content-Type: application/soap+xml; charset="utf-8"
Content-Length: nnnn
SOAPAction: "CreateSubject"
<?xml version="1.0"?>
<soap:Envelope xmlns:soap="http://www.w3.org/2003/05/soap-envelope">
     <soap:Body>
          <tns:~~CreateSubjectRequest~~CreateSubject
                         xmlns:tns="http://docs.oasis-open.org/bias/bias-1.0/"
/>
     </soap:Body>
</soap:Envelope>
```

Create Subject Request with SubjectID Parameter:

```
POST /bias HTTP/1.1
Host: www.acme.com
Content-Type: application/soap+xml; charset="utf-8"
Content-Length: nnnn
SOAPAction: "CreateSubject"
<?xml version="1.0"?>
<soap:Envelope xmlns:soap="http://www.w3.org/2003/05/soap-envelope">
     <soap:Body>
          <tns:~~CreateSubjectRequest~~CreateSubject
xmlns:tns="http://docs.oasis-open.org/bias/bias-1.0/">
               <tns:Identity>
                    <tns:SubjectID>123456789</tns:SubjectID>
               </tns:Identity>
          </tns:~~CreateSubjectRequest~~CreateSubject>
```

Formatted: Font color: Auto

Formatted: Font color: Auto

Copyright © OASIS Open 2009-2011. All Rights Reserved.

```
    </soap:Body>
</soap:Envelope>
```

Create Subject Request with Optional OASIS BIAS Content:

```
POST /bias HTTP/1.1
Host: www.acme.com
Content-Type: application/soap+xml; charset="utf-8"
Content-Length: nnnn
SOAPAction: "CreateSubject"
<?xml version="1.0"?>
<soap:Envelope xmlns:soap="http://www.w3.org/2003/05/soap-envelope">
    <soap:Body>
        <tns:~~CreateSubjectRequest~~CreateSubject
xmlns:tns="http://docs.oasis-open.org/bias/bias-1.0/">
            <tns:GenericRequestParameters>
                <tns:Application>BIAS Application</tns:Application>
                <tns:ApplicationUser>BIAS User</tns:ApplicationUser>
            </tns:GenericRequestParameters>
            <tns:Identity>
                <tns:SubjectID>123456789</tns:SubjectID>
            </tns:Identity>
        </tns:~~CreateSubjectRequest~~CreateSubject>
    </soap:Body>
</soap:Envelope>
```

Simple Create Subject Response:

```
HTTP/1.1 200 OK
Content-Type: application/soap+xml; charset="utf-8"
Content-Length: nnnn
<?xml version="1.0"?>
<soap:Envelope xmlns:soap="http://www.w3.org/2003/05/soap-envelope">
    <soap:Body>
        <tns:CreateSubjectResponse
xmlns:tns="http://docs.oasis-open.org/bias/bias-1.0/">
            <tns:ResponseStatus>
                <tns:Return>0</tns:Return>
            </tns:ResponseStatus>
            <tns:Identity>
                <tns:SubjectID>123456789</tns:SubjectID>
            </tns:Identity>
        </tns:CreateSubjectResponse>
    </soap:Body>
</soap:Envelope>
```

Formatted: Font color: Auto

Copyright © OASIS Open 2009-2011. All Rights Reserved.

Create Subject Response with Optional OASIS BIAS Content:

```
HTTP/1.1 200 OK
Content-Type: application/soap+xml; charset="utf-8"
Content-Length: nnnn
<?xml version="1.0"?>
<soap:Envelope xmlns:soap="http://www.w3.org/2003/05/soap-envelope">
     <soap:Body>
          <tns:CreateSubjectResponse
xmlns:tns="http://docs.oasis-open.org/bias/bias-1.0/">
               <tns:ResponseStatus>
                    <tns:Return>0</tns:Return>
                    <tns:Message>Subject ID 123456789 successfully
created.</tns:Message>
               </tns:ResponseStatus>
               <tns:Identity>
                    <tns:SubjectID>123456789</tns:SubjectID>
               </tns:Identity>
          </tns:CreateSubjectResponse>
     </soap:Body>
</soap:Envelope>
```

C.2 Set Biographic Data Request/Response Example

INCITS BIAS Specification

```
<interface name="SetBiographicData">
     <parameter name="SubjectID" type="xs:string" direction="in" />
     <parameter name="IdentityModel" type="IdentityModelType"—direction="in"
/>
     <parameter name="EncounterID"—type="xs:string" direction="inout"
use="optional" />
     <parameter name="BiographicData" type="BiographicDataType"—direction="in"
/>
     <parameter name="Return" type="xs:unsignedLong" direction="out" />
</interface>
```

OASIS BIAS Examples

Set Biographic Data Request:

```
POST /bias HTTP/1.1
Host: www.acme.com
Content-Type: application/soap+xml; charset="utf-8"
Content-Length: nnnn
SOAPAction: "SetBiographicData"
<?xml version="1.0"?>
```


Copyright © OASIS Open 2009-2011. All Rights Reserved.

```
<soap:Envelope xmlns:soap="http://www.w3.org/2003/05/soap-envelope">
     <soap:Body>
          <tns:~~SetBiographicDataRequest~~SetBiographicData
                         xmlns:tns="http://docs.oasis-open.org/bias/bias-1.0/">
               <tns:Identity>
                    <tns:SubjectID>123456789></tns:SubjectID>
                    <tns:BiographicData>
                         <tns:BiographicDataItem>
                              <tns:Name>Last</tns:Name>
                              <tns:Type>string</tns:Type>
                              <tns:Value>Doe</tns:Value>
                         </tns:BiographicDataItem>
                    </tns:BiographicData>
               </tns:Identity>
               <tns:IdentityModel>person</tns:IdentityModel>
          </tns:~~SetBiographicDataRequest~~SetBiographicData>
     </soap:Body>
</soap:Envelope>
```

Set Biographic Data Response:

```
HTTP/1.1 200 OK
Content-Type: application/soap+xml; charset="utf-8"
Content-Length: nnnn
<?xml version="1.0"?>
<soap:Envelope xmlns:soap="http://www.w3.org/2003/05/soap-envelope">
     <soap:Body>
          <tns:SetBiographicDataResponse
                         xmlns:tns="http://docs.oasis-open.org/bias/bias-1.0/">
               <tns:ResponseStatus>
                    <tns:Return>0</tns:Return>
               </tns:ResponseStatus>
          </tns:SetBiographicDataResponse>
     </soap:Body>
</soap:Envelope>
```

C.3 Set Biometric Data Request/Response Example

INCITS BIAS Specification

```
<interface name="SetBiometricData">
     <parameter name="SubjectID" type="xs:string" direction="in" />
     <parameter name="IdentityModel" type="IdentityModelType"–direction="in"
/>
```


Copyright © OASIS Open 2009-2011. All Rights Reserved.

```
     <parameter name="EncounterID" type="xs:string" direction="inout"
use="optional" />
     <parameter name="BIRList" type="CBEFF_BIR_ListType" direction="in" />
     <parameter name="Return" type="xs:unsignedLong" direction="out" />
</interface>
```

OASIS BIAS Examples

Set Biometric Data Request:

```
POST /bias HTTP/1.1
Host: www.acme.com
Content-Type: application/soap+xml; charset="utf-8"
Content-Length: nnnn
SOAPAction: "SetBiometricData"
<?xml version="1.0"?>
<soap:Envelope xmlns:soap="http://www.w3.org/2003/05/soap-envelope">
     <soap:Body>
          <tns:SetBiometricDataRequestSetBiometricData
                         xmlns:tns="http://docs.oasis-open.org/bias/bias-1.0/">
               <tns:Identity>
                    <tns:SubjectID>123456789></tns:SubjectID>
                    <tns:BiometricData>
                         <tns:BIRList>
                              <tns:BIR>biometric data</tns:BIR>
                         </tns:BIRList>
                    </tns:BiometricData>
               </tns:Identity>
               <tns:IdentityModel>person</tns:IdentityModel>
          </tns:SetBiometricDataRequestSetBiometricData>
     </soap:Body>
</soap:Envelope>
```

Set Biometric Data Response:

```
HTTP/1.1 200 OK
Content-Type: application/soap+xml; charset="utf-8"
Content-Length: nnnn
<?xml version="1.0"?>
<soap:Envelope xmlns:soap="http://www.w3.org/2003/05/soap-envelope">
     <soap:Body>
          <tns:SetBiometricDataResponse
                         xmlns:tns="http://docs.oasis-open.org/bias/bias-1.0/">
               <tns:ResponseStatus>
                    <tns:Return>0</tns:Return>
```


Copyright © OASIS Open 2009-2011. All Rights Reserved.

```
                </tns:ResponseStatus>
            </tns:SetBiometricDataResponse>
        </soap:Body>
    </soap:Envelope>
```


Copyright © OASIS Open 2009-2011. All Rights Reserved.

Annex D. Acknowledgements

The following individuals have participated in the creation of this specification and are gratefully acknowledged:

Participants:

Name	Affiliation
Mr. Young Bang	Booz Allen Hamilton
Mr. Ed. Clay	Sun
Mr. Murty Gurajada *	Raining Data Corporation
Mr. Dale Hapeman	US Department of Defense
Dr. Charles Li	Raytheon
Mr. Kevin Mangold	NIST
Mr. John Mayer-Splain	US Department of Homeland Security
Dr. Ross Michaels	NIST
Mr. Ramesh Nagappan	Sun
Mr. Ash Parikh *	Raining Data Corporation
Mr. Matthew Swayze	Daon
Mr. Guy Swope	Raytheon
Mrs. Catherine Tilton	Daon
Mr. Alessandro Triglia	OSS Nokalva
Mr. Brad Wing	NIST (formerly DHS)
Mr. Michael Wittman	Raytheon
Mr. Gregory Zektser	Booz Allen Hamilton

* Though no longer members of the BIAS TC, these individuals contributed in the early stages of the development of this standard.

In addition, the inputs from the INCITS technical committee M1 are also gratefully appreciated.

Copyright © OASIS Open 2009-2011. All Rights Reserved.

Annex E. Revision History

Revision	Date	Editor	Changes Made
0.01	2008-05-23	TBD	Initial draft
0.02	2008-07-23	TBD	Inserted data dictionary Added normative references Updated sec 3 & 5 + Annex B
0.03	2008-08-19	TBD	WSDL updated
0.04	2008-09-11	TBD	Updated references Added security requirements Corrected Fig. 3
0.05	2008-09-29	TBD	SSL/TLS requirement clarified Reordered material in 5.3 & App C/D Updated references 2 new use cases added (App C) Updated examples in App D
0.06	2008-11-17	TBD	Added BIAS operation name methods (new 5.3 + 4.2.27 & App B)
0.06a	2008-11-20	TBD	Updated references
0.07	2008-11-27	TBD	Revised fault structures and error handling
0.08	2009-06-22	TBD	Incorporated comments from informal public review.
0.09	2009-07-24	Tilton/Swayze	Incorporated comments from June review/meeting. Major changes included: - Breaking Clause 3 into 2 clauses for data elements and operations - Specification of URI & IRI - Clarifications and formatting
0.10	2009-10-19	Tilton/Swayze	Expansion of conformance clause
0.11	2009-11-16	Tilton/Swayze	Miscellaneous edits and clarifications [Also published as CD01]
0.12	2010-11-04	Tilton/Swayze	Incorporation of public review comments Update WSDL
0.13	2011-01-03	Tilton/Mangold	Clarification regarding xsd:any Updated WSDL

Copyright © OASIS Open 2009-2011. All Rights Reserved.